YASKAWA

Σ-7-Series AC Servo Drive

Σ-7W/Σ-7C SERVOPACK with Hardware Option Specifications HWBB Function

Product Manual

Model: SGD7W-□□□□□□□□700
SGD7C-□□□□□□□□700

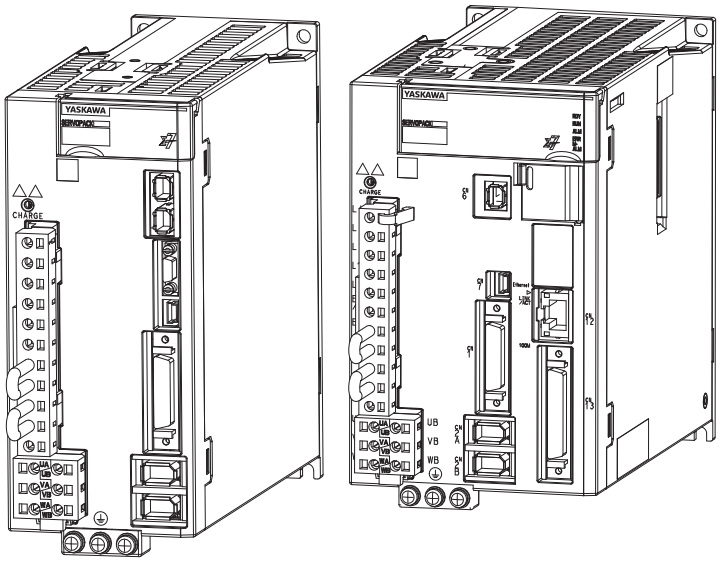

Basic Information on SERVOPACKs 1

Selecting a SERVOPACK 2

SERVOPACK Installation 3

Wiring and Connecting SERVOPACKs 4

Safety Functions 5

Maintenance 6

Appendices 7

MANUAL NO. SIEP S800001 72D

Copyright © 2015 YASKAWA ELECTRIC CORPORATION

All rights reserved. No part of this publication may be reproduced, stored in a retrieval system, or transmitted, in any form, or by any means, mechanical, electronic, photocopying, recording, or otherwise, without the prior written permission of Yaskawa. No patent liability is assumed with respect to the use of the information contained herein. Moreover, because Yaskawa is constantly striving to improve its high-quality products, the information contained in this manual is subject to change without notice. Every precaution has been taken in the preparation of this manual. Nevertheless, Yaskawa assumes no responsibility for errors or omissions. Neither is any liability assumed for damages resulting from the use of the information contained in this publication.

About this Manual

This manual describes the following two types of SERVOPACKs that are equipped with the HWBB safety function.

- Σ-7-Series AC Servo Drive Σ-7W SERVOPACK with MECHATROLINK-III Communications References HWBB Option Specifications (SGD7W-□□□□□□□700)
- Σ-7-Series AC Servo Drive Σ-7C SERVOPACKs (SGD7C-□□□□□□□700)

It describes the specifications of Σ-7W/Σ-7C SERVOPACKs that are different from the Σ-7W/Σ-7C SERVOPACKs that do not have the HWBB function.

Refer to the following manuals for your SERVOPACK for other product information.

- Σ-7-Series Σ-7W SERVOPACK with MECHATROLINK-III Communications References Product Manual (Manual No.: SIEP S800001 29)
- Σ-7-Series Σ-7C SERVOPACK Product Manual (Manual No.: SIEP S800002 04)
- Σ-7-Series Σ-7C SERVOPACK Troubleshooting Manual (Manual No.: SIEP S800002 07)

Read and understand this manual and the above manual to ensure correct usage of the Σ-7-Series AC Servo Drives.

Keep this manual and the above manuals in a safe place so that they can be referred to whenever necessary.

Finding Information

Information on these SERVOPACKs is provided in different manuals.

Use the following table to find what information is provided in this manual and what information is provided in the other manuals given in the table.

- Σ-7-Series Σ-7W SERVOPACK with MECHATROLINK-III Communications References Product Manual (Manual No.: SIEP S800001 29)
- Σ-7-Series Σ-7C SERVOPACK Product Manual (Manual No.: SIEP S800002 04)

Item			This Manual	Σ-7W SERVOPACK with MECHATROLINK-III Communications References Product Manual (Manual No.: SIEP S800001 29)	Σ-7C SERVOPACK Product Manual (Manual No.: SIEP S800002 04)
Basic Information on SERVOPACKs	The Σ-7 Series		–	1.1	1.1
	SERVOPACKs with HWBB Function		1.1	–	–
	Interpreting the Nameplate		1.2	–	–
	Part Names		1.3	–	–
	Model Designations	Interpreting SERVOPACK Model Numbers	1.4	–	–
		Interpreting Servomotor Model Numbers	–	1.4.2	1.4.2
	Combinations of SERVOPACKs and Servomotors		–	1.5	1.11
	Functions		–	1.6	1.13

Continued on next page.

Continued from previous page.

Item			This Manual	Σ-7W SERVOPACK with MECHATROLINK-III Communications References Product Manual (Manual No.: SIEP S800001 29)	Σ-7C SERVOPACK Product Manual (Manual No.: SIEP S800002 04)
Selecting a SERVOPACK	Ratings and Specifications	Ratings	–	2.1.1	1.5.1
		SERVOPACK Overload Protection Characteristics	–	2.1.2	1.5.2
		General Specifications	2.1	–	–
	Block Diagrams		2.2	–	–
	External Dimensions		2.3	–	–
	Examples of Standard Connections between SERVOPACKs and Peripheral Devices		2.4	–	–
SERVOPACK Installation	EMC Installation Conditions		3.1	–	–
	Other installation information		–	Chapter 3	Chapter 2
Wiring and Connecting SERVOPACKs	Wiring and Connecting SERVOPACKs	General Precautions	4.1	–	–
		Countermeasures against Noise	–	4.1.2	3.1.2
		Grounding	–	4.1.3	3.1.3
	Basic Wiring Diagrams		4.2	–	–
	Wiring the Power Supply to the SERVOPACK		–	4.3	3.5
	Wiring Servomotors		–	4.4	3.4
	I/O Signal Connections		–	4.5	3.6, 3.7
	Connecting Safety Function Signals		4.3	–	–
	Connecting MECHATROLINK Communications Cables		–	4.6	3.8
	Connecting the Other Connectors		–	4.7	3.9
Basic Functions That Require Setting before Operation			–	Chapter 5	–
Application Functions			–	Chapter 6	–
Preparations			–	–	Chapter 4
Device-Specific Settings			–	–	Chapter 5
Trial Operation and Actual Operation			–	Chapter 7	Chapter 6
Creating User Programs			–	–	Chapter 7
Tuning			–	Chapter 8	Chapter 8
Monitoring			–	Chapter 9	Chapter 9
Safety Functions			Chapter 5	–	–

Continued on next page.

Continued from previous page.

Item			This Manual	Σ-7W SERVOPACK with MECHATROLINK-III Communications References Product Manual (Manual No.: SIEP S800001 29)	Σ-7C SERVOPACK Product Manual (Manual No.: SIEP S800002 04)
Maintenance	Inspections and Part Replacement		–	10.1	10.1
	Alarm Displays	Alarms Related to the HWBB Function	6.1.1	–	*
		Other Alarms	–	10.2.1	
		Troubleshooting Alarms Related to the HWBB Function	6.1.2	–	
		Troubleshooting Other Alarms	–	10.2.2	
		Resetting Alarms	–	10.2.3	
		Displaying the Alarm History	–	10.2.4	
		Clearing the Alarm History	–	10.2.5	
		Resetting Motor Type Alarms	–	10.2.6	
	Troubleshooting Based on the Operation and Conditions of the Servomotor	Troubleshooting Problems Related to the HWBB Function	6.2	–	
		Troubleshooting other problems	–	10.5	
Parameter Lists			–	Chapter 11	Chapter 11
Appendices	Interpreting Panel Displays	Panel Display during the HWBB State	7.1	–	–
		Other Panel Display	–	12.1	–
	Corresponding SERVOPACK and SigmaWin+ Function Names	Corresponding SERVOPACK Utility Function Names	–	12.2.1	–
		Corresponding Monitor Display Function Names Related to the HWBB Function	7.2	–	–
		Other Corresponding SERVOPACK Monitor Display Function Names	–	12.2.2	–

* Refer to the following manual.
Σ-7-Series Σ-7C SERVOPACK Troubleshooting Manual (Manual No.: SIEP S800002 07)

Related Documents

The relationships between the documents that are related to the Servo Drives are shown in the following figure. The numbers in the figure correspond to the numbers in the table on the following pages. Refer to these documents as required.

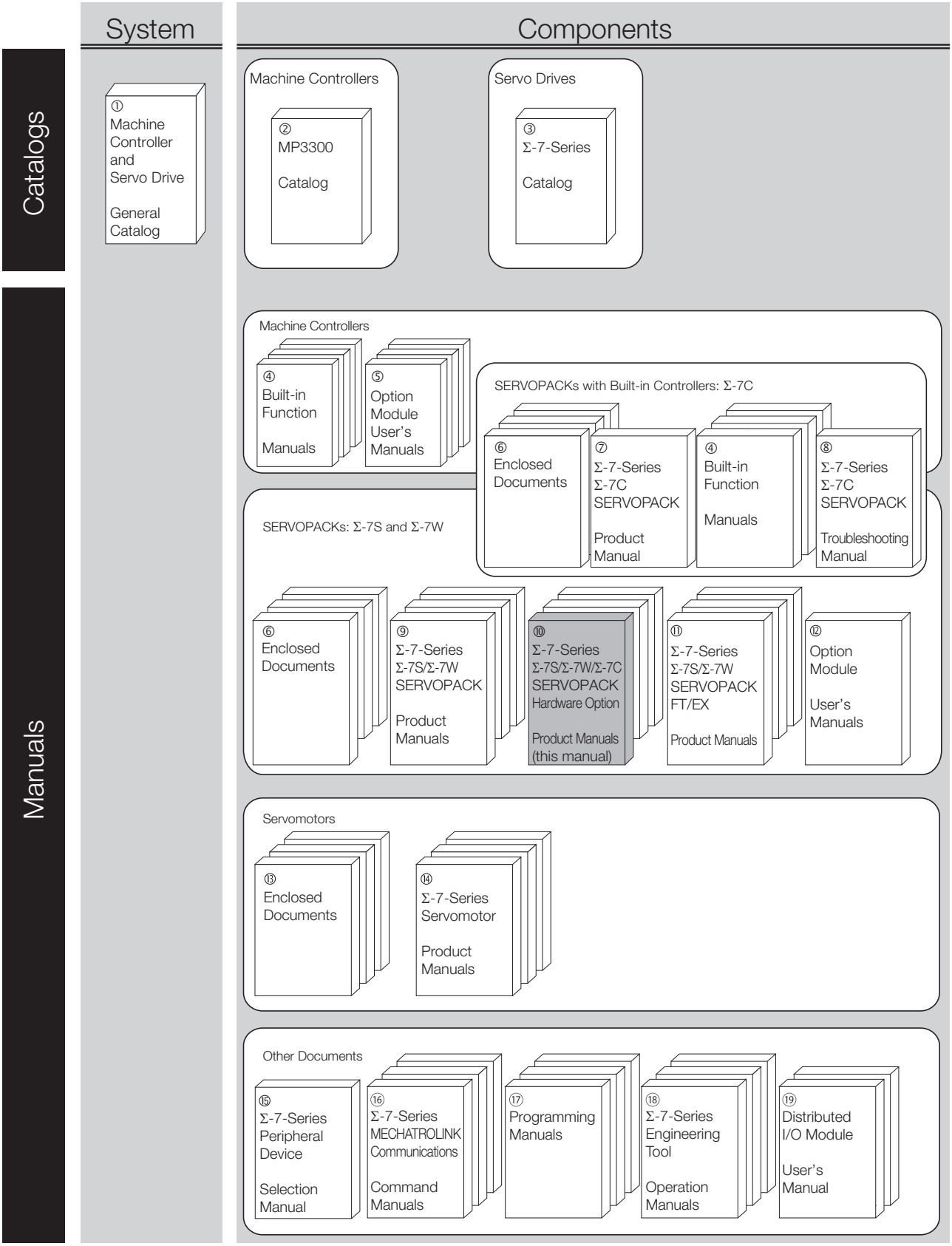

Classification	Document Name	Document No.	Description
① Machine Controller and Servo Drive General Catalog	Machine Controller and AC Servo Drive Solutions Catalog	KAEP S800001 22	Describes the features and application examples for combinations of MP3000-Series Machine Controllers and Σ-7-Series AC Servo Drives.
② MP3300 Catalog	Machine Controller MP3300	KAEP C880725 03	Provides detailed information on MP3300 Machine Controllers, including features and specifications.
③ Σ-7-Series Catalog	AC Servo Drives Σ-7 Series	KAEP S800001 23	Provides detailed information on Σ-7-Series AC Servo Drives, including features and specifications.
④ Built-in Function Manuals	Σ-7-Series AC Servo Drive Σ-7C SERVOPACK Motion Control User's Manual	SIEP S800002 03	Provides detailed information on the specifications, system configuration, and application methods of the Motion Control Function Modules (SVD, SVC4, and SVR4) for Σ-7-Series Σ-7C SERVOPACKS.
	Machine Controller MP3000 Series Communications User's Manual	SIEP C880725 12	Provides detailed information on the specifications, system configuration, and communications connection methods for the Ethernet communications that are used with MP3000-Series Machine Controllers and Σ-7-Series Σ-7C SERVOPACKs.
⑤ Option Module User's Manuals	Machine Controller MP2000 Series Communication Module User's Manual	SIEP C880700 04	Provide detailed information on the specifications and communications methods for the Communications Modules that can be mounted to MP3000-Series Machine Controllers and Σ-7-Series Σ-7C SERVOPACKs.
	Machine Controller MP2000 Series 262IF-01 FL-net Communication Module User's Manual	SIEP C880700 36	
	Machine Controller MP2000 Series 263IF-01 EtherNet/IP Communication Module User's Manual	SIEP C880700 39	
	Machine Controller MP2000 Series I/O Module User's Manual	SIEP C880700 34	Provide detailed information on the specifications and communications methods for the I/O Modules that can be mounted to MP3000-Series Machine Controllers and Σ-7-Series Σ-7C SERVOPACKs.
	Machine Controller MP2000 Series Analog Input/Analog Output Module AI-01/AO-01 User's Manual	SIEP C880700 26	
	Machine Controller MP2000 Series Counter Module CNTR-01 User's Manual	SIEP C880700 27	

Continued on next page.

Continued from previous page.

Classification	Document Name	Document No.	Description
⑥ Enclosed Documents	Σ-7-Series AC Servo Drive Σ-7S, Σ-7W, and Σ-7C SERVOPACK Safety Precautions	TOMP C710828 00	Provides detailed information for the safe usage of Σ-7-Series SERVOPACKs.
	Σ-V-Series/Σ-V-Series for Large-Capacity Models/ Σ-7-Series Safety Precautions Option Module	TOBP C720829 00	Provides detailed information for the safe usage of Option Modules.
	Σ-V-Series/Σ-V-Series for Large-Capacity Models/ Σ-7-Series Installation Guide Command Option Module	TOBP C720829 01	Provides detailed procedures for installing the Command Option Module in a SERVOPACK.
	Σ-V-Series/Σ-V-Series for Large-Capacity Models/ Σ-7-Series Installation Guide Fully-closed Module	TOBP C720829 03	Provides detailed procedures for installing the Fully-closed Module in a SERVOPACK.
	Σ-V-Series/Σ-V-Series for Large-Capacity Models/ Σ-7-Series Installation Guide Safety Module	TOBP C720829 06	Provides detailed procedures for installing the Safety Module in a SERVOPACK.
	Σ-V-Series/Σ-V-Series for Large-Capacity Models/ Σ-7-Series Installation Guide INDEXER Module	TOBP C720829 02	Provides detailed procedures for installing the INDEXER Module in a SERVOPACK.
	Σ-V-Series/Σ-V-Series for Large-Capacity Models/ Σ-7-Series Installation Guide DeviceNet Module	TOBP C720829 07	Provides detailed procedures for installing the DeviceNet Module in a SERVOPACK.
⑦ Σ-7-Series Σ-7C SERVOPACK Product Manual	Σ-7-Series AC Servo Drive Σ-7C SERVOPACK Product Manual	SIEP S800002 04	Provides detailed information on selecting Σ-7-Series Σ-7C SERVOPACKs; installing, connecting, setting, testing in trial operation, and tuning Servo Drives; writing, monitoring, and maintaining programs; and other information.
⑧ Σ-7-Series Σ-7C SERVOPACK Troubleshooting Manual	Σ-7-Series AC Servo Drive Σ-7C SERVOPACK Troubleshooting Manual	SIEP S800002 07	Provides detailed troubleshooting information for Σ-7-Series Σ-7C SERVOPACKs.

Continued on next page.

Continued from previous page.

Classification	Document Name	Document No.	Description
⑨ Σ-7-Series Σ-7S/Σ-7W SERVOPACK Product Manuals	Σ-7-Series AC Servo Drive Σ-7S SERVOPACK with MECHATROLINK-4 Communications References Product Manual	SIEP S800002 31	Provide detailed information on selecting Σ-7-Series SERVOPACKs and information on installing, connecting, setting, performing trial operation for, tuning, and monitoring the Servo Drives.
	Σ-7-Series AC Servo Drive Σ-7S SERVOPACK with MECHATROLINK-III Communications References Product Manual	SIEP S800001 28	
	Σ-7-Series AC Servo Drive Σ-7S SERVOPACK with MECHATROLINK-II Communications References Product Manual	SIEP S800001 27	
	Σ-7-Series AC Servo Drive Σ-7S SERVOPACK with Analog Voltage/Pulse Train References Product Manual	SIEP S800001 26	
	Σ-7-Series AC Servo Drive Σ-7S SERVOPACK Command Option Attachable Type with INDEXER Module Product Manual	SIEP S800001 64	
	Σ-7-Series AC Servo Drive Σ-7S SERVOPACK Command Option Attachable Type with DeviceNet Module Product Manual	SIEP S800001 70	
	Σ-7-Series AC Servo Drive Σ-7W SERVOPACK with MECHATROLINK-III Communications References Product Manual	SIEP S800001 29	
⑩ Σ-7-Series Σ-7S/Σ-7W/Σ-7C SERVOPACK with Hardware Option Specifications Product Manuals	Σ-7-Series AC Servo Drive Σ-7S/Σ-7W SERVOPACK with Hardware Option Specifications Dynamic Brake Product Manual	SIEP S800001 73	Provides detailed information on Hardware Options for Σ-7-Series SERVOPACKs.
	Σ-7-Series AC Servo Drive Σ-7W/Σ-7C SERVOPACK with Hardware Option Specifications HWBB Function Product Manual	This manual (SIEP S800001 72)	

Continued on next page.

Continued from previous page.

Classification	Document Name	Document No.	Description
⑪ Σ-7-Series Σ-7S/Σ-7W SERVOPACK FT/EX Product Manuals	Σ-7-Series AC Servo Drive Σ-7S SERVOPACK with FT/EX Specification for Indexing Application Product Manual	SIEP S800001 84	Provides detailed information on the FT/EX Option for Σ-7-Series SERVOPACKs.
	Σ-7-Series AC Servo Drive Σ-7S SERVOPACK with FT/EX Specification for Tracking Application Product Manual	SIEP S800001 89	
	Σ-7-Series AC Servo Drive Σ-7S SERVOPACK with FT/EX Specification for Application with Special Motor, SGM7D Motor Product Manual	SIEP S800001 91	
⑪ Σ-7-Series Σ-7S/Σ-7W SERVOPACK FT/EX Product Manuals	Σ-7-Series AC Servo Drive Σ-7S SERVOPACK with FT/EX Specification for Press and Injection Molding Application Product Manual	SIEP S800001 94	Provides detailed information on the FT/EX Option for Σ-7-Series SERVOPACKs.
	Σ-7-Series AC Servo Drive Σ-7S SERVOPACK with FT/EX Specification for Transfer and Alignment Application Product Manual	SIEP S800001 95	
	Σ-7-Series AC Servo Drive Σ-7S SERVOPACK with FT/EX Specification for Torque/Force Assistance for Conveyance Application Product Manual	SIEP S800002 09	
	Σ-7-Series AC Servo Drive Σ-7S SERVOPACK with FT/EX Specification for Cutting Application Feed Shaft Motor Product Manual	SIEP S800002 10	
	Σ-7-Series AC Servo Drive Σ-7S SERVOPACK with FT/EX Specification for Three-Point Latching for Conveyance Application Product Manual	SIEP S800002 17	
	Σ-7-Series AC Servo Drive Σ-7S SERVOPACK with FT/EX Specification for Semi-/Fully-Closed Loop Control Online Switching for Conveyance Application Product Manual	SIEP S800002 27	
	Σ-7-Series AC Servo Drive Σ-7W SERVOPACK with FT/EX Specification for Gantry Applications Product Manual	SIEP S800002 29	

Continued on next page.

Continued from previous page.

Classification	Document Name	Document No.	Description
⑫ Option Module User's Manual	AC Servo Drives Σ-V-Series/Σ-V-Series for Large-Capacity Models/ Σ-7-Series User's Manual Safety Module	SIEP C720829 06	Provides details information required for the design and maintenance of a Safety Module.
⑬ Enclosed Documents	AC Servo Drive Rotary Servomotor Safety Precautions	TOBP C230260 00	Provides detailed information for the safe usage of Rotary Servomotors and Direct Drive Servomotors.
	AC Servomotor Linear Σ Series Safety Precautions	TOBP C230800 00	Provides detailed information for the safe usage of Linear Servomotors.
⑭ Σ-7-Series Servomotor Product Manuals	Σ-7-Series AC Servo Drive Rotary Servomotor Product Manual	SIEP S800001 36	Provide detailed information on selecting, installing, and connecting the Σ-7-Series Servomotors.
	Σ-7-Series AC Servo Drive Linear Servomotor Product Manual	SIEP S800001 37	
	Σ-7-Series AC Servo Drive Direct Drive Servomotor Product Manual	SIEP S800001 38	
⑮ Σ-7-Series Peripheral Device Selection Manual	Σ-7-Series AC Servo Drive Peripheral Device Selection Manual	SIEP S800001 32	Describes the peripheral devices for a Σ-7-Series Servo System.
⑯ Σ-7-Series MECHATROLINK Communications Command Manuals	Σ-7-Series AC Servo Drive MECHATROLINK-II Communications Command Manual	SIEP S800001 30	Provides detailed information on the MECHATROLINK-II communications commands that are used for a Σ-7-Series Servo System.
	Σ-7-Series AC Servo Drive MECHATROLINK-III Communications Standard Servo Profile Command Manual	SIEP S800001 31	Provides detailed information on the MECHATROLINK-III communications standard servo profile commands that are used for a Σ-7-Series Servo System.
	Σ-7-Series AC Servo Drive MECHATROLINK-4 Communications Standard Servo Profile Command Manual	SIEP S800002 32	Provides detailed information on the MECHATROLINK-4 communications standard servo profile commands that are used for a Σ-7-Series Servo System.

Continued on next page.

Continued from previous page.

Classification	Document Name	Document No.	Description
⑰ Programming Manuals	Machine Controller MP3000 Series Ladder Programming Manual	SIEP C880725 13	Provides detailed information on the ladder programming specifications and instructions for MP3000-Series Machine Controllers and Σ-7-Series Σ-7C SERVOPACKs.
	Machine Controller MP3000 Series Motion Programming Manual	SIEP C880725 14	Provides detailed information on the motion programming and sequence programming specifications and instructions for MP3000-Series Machine Controllers and Σ-7-Series Σ-7C SERVOPACKs.
⑱ Σ-7-Series Operation Interface Operating Manuals	Machine Controller MP2000/MP3000 Series Engineering Tool MPE720 Version 7 User's Manual	SIEP C880761 03	Describes in detail how to operate MPE720 version 7.
	Σ-7-Series AC Servo Drive Digital Operator Operating Manual	SIEP S800001 33	Describes the operating procedures for a Digital Operator for a Σ-7-Series Servo System.
	AC Servo Drive Engineering Tool SigmaWin+ Operation Manual	SIET S800001 34	Provides detailed operating procedures for the SigmaWin+ Engineering Tool for a Σ-7-Series Servo System.
⑲ Distributed I/O Module User's Manuals	MECHATROLINK-III Compatible I/O Module User's Manual	SIEP C880781 04	Describes the functions, specifications, operating methods, and MECHATROLINK-III communications for the Remote I/O Modules for MP2000/MP3000-Series Machine Controllers.
	MECHATROLINK-4 Compatible I/O Module User's Manual	SIEP C880782 01	Describes the functions, specifications, operating methods, and MECHATROLINK-4 communications for the Remote I/O Modules for MP3000-Series Machine Controllers.

Using This Manual

◆ Technical Terms Used in This Manual

The following terms are used in this manual.

Term	Meaning
Servomotor	A Σ-7-Series Rotary Servomotor, Direct Drive Servomotor, or Linear Servomotor.
Rotary Servomotor	A generic term used for a Σ-7-Series Rotary Servomotor (SGM7M, SGM7J, SGM7A, SGM7P, SGM7G, or SGMMV) or a Direct Drive Servomotor (SGM7E, SGM7F, SGMCV, or SGMCS). The descriptions will specify when Direct Drive Servomotors are excluded.
Linear Servomotor	A generic term for Σ-7-Series Linear Servomotors (SGLG, SGLF, or SGLT).
SERVOPACK	A Σ-7-Series Σ-7W Servo Amplifier with MECHATROLINK-III Communications References or a Σ-7-Series Σ-7C Servo Amplifier.
Servo Drive	The combination of a Servomotor and SERVOPACK.
Servo System	A servo control system that includes the combination of a Servo Drive with a host controller and peripheral devices.
servo ON	Supplying power to the motor.
servo OFF	Not supplying power to the motor.
base block (BB)	Shutting OFF the power supply to the motor by shutting OFF the base current to the power transistor in the SERVOPACK.
servo lock	A state in which the motor is stopped and is in a position loop with a position reference of 0.
HWBB	An abbreviation for hard wire base block, which is a safety function that is designed to shut OFF the current to the motors with a hardwired circuit.
Main Circuit Cable	One of the cables that connect to the main circuit terminals, including the Main Circuit Power Supply Cable, Control Power Supply Cable, and Servomotor Main Circuit Cable.
SigmaWin+	The Engineering Tool for setting up and tuning Servo Drives or a computer in which the Engineering Tool is installed.
MPE720	The Engineering Tool or a personal computer running the Engineering Tool
PLC	A Programmable Logic Controller.
Servo Section	The part of a Σ-7C SERVOPACK that provides servo functionality.
Controller Section	The part of a Σ-7C SERVOPACK that provides controller functionality.
CPU	The CPU built into the Controller Section of a Σ-7C SERVOPACK.
Motion Control Function Module	The SVD, SVC4, or SVR4 Function Modules in the Controller Section of the SERVOPACK.
SVD	A Motion Control Function Module for the two axes of a Σ-7C SERVOPACK that connects to the Controller Section and Servo Section of the Σ-7C SERVOPACK through a bus.
SVC4	A Motion Control Function Module that uses MECHATROLINK-III communications to communicate with MECHATROLINK-III slave devices.
Communications Function Module	The Function Module in the 218IFD built into the CPU.
Absolute Encoder	The general term used for absolute encoders with batteries and batteryless absolute encoders. In cases where the general term causes confusion, the term “batteryless absolute encoder” may also be used.

◆ Differences in Terms for Rotary Servomotors and Linear Servomotors

There are differences in the terms that are used for Rotary Servomotors and Linear Servomotors. This manual primarily describes Rotary Servomotors. If you are using a Linear Servomotor, you need to interpret the terms as given in the following table.

Rotary Servomotors	Linear Servomotors
torque	force
moment of inertia	mass
rotation	movement
forward rotation and reverse rotation	forward movement and reverse movement
CW and CCW pulse trains	forward and reverse pulse trains
rotary encoder	linear encoder
absolute rotary encoder	absolute linear encoder
incremental rotary encoder	incremental linear encoder
unit: min^{-1}	unit: mm/s
unit: N·m	unit: N

◆ Notation Used in this Manual

■ Notation for Reverse Signals

The names of reverse signals (i.e., ones that are valid when low) are written with a forward slash (/) before the signal abbreviation.

Notation Example

$\overline{BK}$ is written as /BK.

◆ Trademarks

- QR code is a trademark of Denso Wave Inc.
- MECHATROLINK is a trademark of the MECHATROLINK Members Association.
- DeviceNet is a registered trademark of the ODVA (Open DeviceNet Venders Association).
- PROFIBUS is a trademark of the PROFIBUS User Organization.
- Ethernet is a registered trademark of the Xerox Corporation.
- Other product names and company names are the trademarks or registered trademarks of the respective company. “TM” and the ® mark do not appear with product or company names in this manual.

◆ Visual Aids

The following aids are used to indicate certain types of information for easier reference.

Important — Indicates precautions or restrictions that must be observed.
Also indicates alarm displays and other precautions that will not result in machine damage.

Term — Indicates definitions of difficult terms or terms that have not been previously explained in this manual.

Example — Indicates operating or setting examples.

Information — Indicates supplemental information to deepen understanding or useful information.

Safety Precautions

◆ Safety Information

To prevent personal injury and equipment damage in advance, the following signal words are used to indicate safety precautions in this document. The signal words are used to classify the hazards and the degree of damage or injury that may occur if a product is used incorrectly. Information marked as shown below is important for safety. Always read this information and heed the precautions that are provided.

⚠ DANGER

- Indicates precautions that, if not heeded, are likely to result in loss of life, serious injury, or fire.

⚠ WARNING

- Indicates precautions that, if not heeded, could result in loss of life, serious injury, or fire.

⚠ CAUTION

- Indicates precautions that, if not heeded, could result in relatively serious or minor injury, or in fire.

NOTICE

- Indicates precautions that, if not heeded, could result in property damage.

◆ Safety Precautions That Must Always Be Observed

■ General Precautions

⚠ DANGER

- Read and understand this manual to ensure the safe usage of the product.
- Keep this manual in a safe, convenient place so that it can be referred to whenever necessary. Make sure that it is delivered to the final user of the product.
- Do not remove covers, cables, connectors, or optional devices while power is being supplied to the SERVOPACK.
  There is a risk of electric shock, operational failure of the product, or burning.

⚠ WARNING

- Use a power supply with specifications (number of phases, voltage, frequency, and AC/DC type) that are appropriate for the product.
  There is a risk of burning, electric shock, or fire.
- Connect the ground terminals on the SERVOPACK and Servomotor to ground poles according to local electrical codes (100 Ω or less for a SERVOPACK with a 100-VAC or 200-VAC power supply, and 10 Ω or less for a SERVOPACK with a 400-VAC power supply).
  There is a risk of electric shock or fire.
- Do not attempt to disassemble, repair, or modify the product.
  There is a risk of fire or failure.
  The warranty is void for the product if you disassemble, repair, or modify it.
- The installation must be suitable and it must be performed only by an experienced technician.
  There is a risk of electric shock or injury.
- Before connecting the machine and starting operation, make sure that an emergency stop procedure has been provided and is working correctly.
  There is a risk of injury.
- Do not touch anything inside the SERVOPACK.
  There is a risk of electric shock.

⚠ CAUTION

- The SERVOPACK heat sinks, regenerative resistors, External Dynamic Brake Resistors, Servomotors, and other components can be very hot while power is ON or soon after the power is turned OFF. Implement safety measures, such as installing covers, so that hands and parts such as cables do not come into contact with hot components.
  There is a risk of burn injury.
- For a 24-VDC power supply, use a power supply device with double insulation or reinforced insulation.
  There is a risk of electric shock.
- Do not damage, pull on, apply excessive force to, place heavy objects on, or pinch cables.
  There is a risk of failure, damage, or electric shock.
- The person who designs the system that uses the hard wire base block safety function must have a complete knowledge of the related safety standards and a complete understanding of the instructions in this document.
  There is a risk of injury, product damage, or machine damage.
- Do not use the product in an environment that is subject to water, corrosive gases, or flammable gases, or near flammable materials.
  There is a risk of electric shock or fire.

NOTICE

- Do not attempt to use a SERVOPACK or Servomotor that is damaged or that has missing parts.
- Install external emergency stop circuits that shut OFF the power supply and stops operation immediately when an error occurs.
- In locations with poor power supply conditions, install the necessary protective devices (such as AC reactors) to ensure that the input power is supplied within the specified voltage range.
  There is a risk of damage to the SERVOPACK.
- Use a Noise Filter to minimize the effects of electromagnetic interference.
  Electronic devices used near the SERVOPACK may be affected by electromagnetic interference.
- Always use a Servomotor and SERVOPACK in one of the specified combinations.
- Do not touch a SERVOPACK or Servomotor with wet hands.
  There is a risk of product failure.

■ Storage Precautions

⚠ CAUTION

- Do not place an excessive load on the product during storage. (Follow all instructions on the packages.)
  There is a risk of injury or damage.

NOTICE

- Do not install or store the product in any of the following locations.
  - Locations that are subject to direct sunlight
  - Locations that are subject to ambient temperatures that exceed product specifications
  - Locations that are subject to relative humidities that exceed product specifications
  - Locations that are subject to condensation as the result of extreme changes in temperature
  - Locations that are subject to corrosive or flammable gases
  - Locations that are near flammable materials
  - Locations that are subject to dust, salts, or iron powder
  - Locations that are subject to water, oil, or chemicals
  - Locations that are subject to vibration or shock that exceeds product specifications
  - Locations near devices that generate strong magnetic fields
  - Locations that are subject to radiation

  If you store or install the product in any of the above locations, the product may fail or be damaged.

■ Transportation Precautions

⚠ CAUTION

- Transport the product in a way that is suitable to the mass of the product.
- Do not use the eyebolts on a SERVOPACK or Servomotor to move the machine.
  There is a risk of damage or injury.
- When you handle a SERVOPACK or Servomotor, be careful of sharp parts, such as the corners.
  There is a risk of injury.
- Do not place an excessive load on the product during transportation. (Follow all instructions on the packages.)
  There is a risk of injury or damage.

NOTICE

- Do not hold onto the front cover or connectors when you move a SERVOPACK.
  There is a risk of the SERVOPACK falling.
- A SERVOPACK or Servomotor is a precision device. Do not drop it or subject it to strong shock.
  There is a risk of failure or damage.
- Do not subject connectors to shock.
  There is a risk of faulty connections or damage.
- Never subject the SERVOPACK to an atmosphere containing halogen (fluorine, chlorine, bromine, or iodine) during transportation.
  There is a risk of failure or damage.
- If disinfectants or insecticides must be used to treat packing materials such as wooden frames, plywood, or pallets, the packing materials must be treated before the product is packaged, and methods other than fumigation must be used.
  Example: Heat treatment, where materials are kiln-dried to a core temperature of 56°C for 30 minutes or more.
  If the electronic products, which include stand-alone products and products installed in machines, are packed with fumigated wooden materials, the electrical components may be greatly damaged by the gases or fumes resulting from the fumigation process. In particular, disinfectants containing halogen, which includes chlorine, fluorine, bromine, or iodine can contribute to the erosion of the capacitors.
- Do not overtighten the eyebolts on a SERVOPACK or Servomotor.
  If you use a tool to overtighten the eyebolts, the tapped holes may be damaged.

■ Installation Precautions

⚠ CAUTION

- Install the Servomotor or SERVOPACK in a way that will support the mass given in technical documents.
- Install SERVOPACKs, Servomotors, regenerative resistors, and External Dynamic Brake Resistors on nonflammable materials.
  Installation directly onto or near flammable materials may result in fire.
- Provide the specified clearances between the SERVOPACK and the control panel as well as with other devices.
  There is a risk of fire or failure.
- Install the SERVOPACK in the specified orientation.
  There is a risk of fire or failure.
- Do not step on or place a heavy object on the product.
  There is a risk of failure, damage, or injury.
- Do not allow any foreign matter to enter the SERVOPACK or Servomotor.
  There is a risk of failure or fire.

NOTICE

- Do not install or store the product in any of the following locations.
  - Locations that are subject to direct sunlight
  - Locations that are subject to ambient temperatures that exceed product specifications
  - Locations that are subject to relative humidities that exceed product specifications
  - Locations that are subject to condensation as the result of extreme changes in temperature
  - Locations that are subject to corrosive or flammable gases
  - Locations that are near flammable materials
  - Locations that are subject to dust, salts, or iron powder
  - Locations that are subject to water, oil, or chemicals
  - Locations that are subject to vibration or shock that exceeds product specifications
  - Locations near devices that generate strong magnetic fields
  - Locations that are subject to radiation

  If you store or install the product in any of the above locations, the product may fail or be damaged.
- Use the product in an environment that is appropriate for the product specifications.
  If you use the product in an environment that exceeds product specifications, the product may fail or be damaged.
- A SERVOPACK or Servomotor is a precision device. Do not drop it or subject it to strong shock.
  There is a risk of failure or damage.
- Always install a SERVOPACK in a control panel.
- Do not allow any foreign matter to enter a SERVOPACK or a Servomotor with a Cooling Fan and do not cover the outlet from the Servomotor's cooling fan.
  There is a risk of failure.
- Never install the SERVOPACK in an atmosphere containing halogen (fluorine, chlorine, bromine, or iodine).
  There is a risk of failure or damage.

■ Wiring Precautions

⚠ DANGER

- Do not change any wiring while power is being supplied.
  There is a risk of electric shock or injury.

⚠ WARNING

- Wiring and inspections must be performed only by qualified engineers.
  There is a risk of electric shock or product failure.
- Check all wiring and power supplies carefully.
  Incorrect wiring or incorrect voltage application to the output circuits may cause short-circuit failures. If a short-circuit failure occurs as a result of any of these causes, the holding brake will not work. This could damage the machine or cause an accident that may result in death or injury.
- Connect the AC and DC power supplies to the specified SERVOPACK terminals.
  - Connect an AC power supply to the L1, L2, and L3 terminals and the L1C and L2C terminals on the SERVOPACK.
  - Connect a DC power supply to the B1/⊕ and ⊖2 terminals and the L1C and L2C terminals on the SERVOPACK.

  There is a risk of failure or fire.
- If you use a SERVOPACK with the Dynamic Brake Hardware Option, connect an External Dynamic Brake Resistor that is suitable for the machine and equipment specifications to the specified terminals.
  There is a risk of unexpected operation, machine damage, burning, or injury when an emergency stop is performed.

⚠ CAUTION

- Wait for six minutes after turning OFF the power supply and then make sure that the CHARGE indicator is not lit before starting wiring or inspection work. Do not touch the power supply terminals while the CHARGE lamp is lit after turning OFF the power supply because high voltage may still remain in the SERVOPACK.
  There is a risk of electric shock.
- Observe the precautions and instructions for wiring and trial operation precisely as described in this document.
  Failures caused by incorrect wiring or incorrect voltage application in the brake circuit may cause the SERVOPACK to fail, damage the equipment, or cause an accident resulting in death or injury.
- Check the wiring to be sure it has been performed correctly.
  Connectors and pin layouts are sometimes different for different models. Always confirm the pin layouts in technical documents for your model before operation.
  There is a risk of failure or malfunction.
- Connect wires to power supply terminals and motor connection terminals securely with the specified methods and tightening torque.
  Insufficient tightening may cause wires and terminal blocks to generate heat due to faulty contact, possibly resulting in fire.
- Use shielded twisted-pair cables or screened unshielded multi-twisted-pair cables for I/O Signal Cables and Encoder Cables.
- The maximum wiring length is 3 m for I/O Signal Cables, and 50 m for Encoder Cables or Servomotor Main Circuit Cables.
- Observe the following precautions when wiring the SERVOPACK's main circuit terminals.
  - Turn ON the power supply to the SERVOPACK only after all wiring, including the main circuit terminals, has been completed.
  - If a connector is used for the main circuit terminals, remove the main circuit connector from the SERVOPACK before you wire it.
  - Insert only one wire per insertion hole in the main circuit terminals.
  - When you insert a wire, make sure that the conductor wire (e.g., whiskers) does not come into contact with adjacent wires.
- Install molded-case circuit breakers and other safety measures to provide protection against short circuits in external wiring.
  There is a risk of fire or failure.
- In places with poor power supply conditions, ensure that the input power is supplied within the specified voltage range.
  There is a risk of equipment damage.
- Provide sufficient shielding when using the SERVOPACK in the following locations.
  - Locations that are subject to noise, such as from static electricity
  - Locations that are subject to strong electromagnetic or magnetic fields
  - Locations that are subject to radiation
  - Locations that are near power lines

  There is a risk of equipment damage.
- Configure the circuits to turn ON the control power supply to the SERVOPACK before the 24-V I/O power supply.
  If the control power supply to the SERVOPACK is turned ON after the external power supply, e.g., the 24-V I/O power supply, the outputs from the SERVOPACK may momentarily turn ON when the power supply to the SERVOPACK turns ON. This can result in unexpected operation that may cause injury or device damage.
- Provide emergency stop circuits, interlock circuits, limit circuits, and any other required safety measures in control circuits outside of the SERVOPACK.
  There is a risk of injury or device damage.
- If you use MECHATROLINK I/O Modules, use the establishment of MECHATROLINK communications as an interlock output condition.
  There is a risk of device damage.
- Select the I/O signal wires for external wiring to connect the SERVOPACK to external devices based on the following criteria:
  - Mechanical strength
  - Noise interference
  - Wiring distance
  - Signal voltage

⚠ CAUTION

- Separate the I/O signal cables for control circuits from the power cables both inside and outside the control panel to reduce the influence of noise from the power cables.
  If the I/O signal lines and power lines are not separated properly, malfunction may occur.

Example of Separated Cables

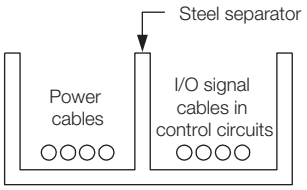

NOTICE

- Whenever possible, use the Cables specified by Yaskawa.
  If you use any other cables, confirm the rated current and application environment of your model and use the wiring materials specified by Yaskawa or equivalent materials.
- Securely tighten connector screws and lock mechanisms.
  Insufficient tightening may result in connectors falling off during operation.
- Do not bundle power lines (e.g., the Main Circuit Cable) and low-current lines (e.g., the I/O Signal Cables or Encoder Cables) together or run them through the same duct. If you do not place power lines and low-current lines in separate ducts, separate them by at least 30 cm.
  If the cables are too close to each other, malfunctions may occur due to noise affecting the low-current lines.
- Install a battery at either the host controller or on the Encoder Cable.
  If you install batteries both at the host controller and on the Encoder Cable at the same time, you will create a loop circuit between the batteries, resulting in a risk of damage or burning.
- When connecting a battery, connect the polarity correctly.
  There is a risk of battery rupture or encoder failure.

■ Operation Precautions

⚠ WARNING

- Before starting operation with a machine connected, change the settings of the switches and parameters to match the machine.
  Unexpected machine operation, failure, or personal injury may occur if operation is started before appropriate settings are made.
- Do not radically change the settings of the parameters.
  There is a risk of unstable operation, machine damage, or injury.
- Install limit switches or stoppers at the ends of the moving parts of the machine to prevent unexpected accidents.
  There is a risk of machine damage or injury.
- For trial operation, securely mount the Servomotor and disconnect it from the machine.
  There is a risk of injury.
- Forcing the motor to stop for overtravel is disabled when the Jog, Origin Search, or EasyFFT utility function is executed. Take necessary precautions.
  There is a risk of machine damage or injury.
- When an alarm occurs, the Servomotor will coast to a stop or stop with the dynamic brake according to the SERVOPACK Option and settings. The coasting distance will change with the moment of inertia of the load and the resistance of the External Dynamic Brake Resistor. Check the coasting distance during trial operation and implement suitable safety measures on the machine.
- Do not enter the machine's range of motion during operation.
  There is a risk of injury.
- Do not touch the moving parts of the Servomotor or machine during operation.
  There is a risk of injury.

⚠ CAUTION

- Design the system to ensure safety even when problems, such as broken signal lines, occur. For example, the P-OT and N-OT signals are set in the default settings to operate on the safe side if a signal line breaks. Do not change the polarity of this type of signal.
- When overtravel occurs, the power supply to the motor is turned OFF and the brake is released. If you use the Servomotor to drive a vertical load, set the Servomotor to enter a zero-clamped state after the Servomotor stops. Also, install safety devices (such as an external brake or counterweight) to prevent the moving parts of the machine from falling.
- Always turn OFF the servo before you turn OFF the power supply. If you turn OFF the main circuit power supply or control power supply during operation before you turn OFF the servo, the Servomotor will stop as follows:
  - If you turn OFF the main circuit power supply during operation without turning OFF the servo, the Servomotor will stop abruptly with the dynamic brake.
  - If you turn OFF the control power supply without turning OFF the servo, the stopping method that is used by the Servomotor depends on the model of the SERVOPACK. For details, refer to the manual for the SERVOPACK.
  - If you use a SERVOPACK with the Dynamic Brake Hardware Option, the Servomotor stopping methods will be different from the stopping methods used without the Option or with other Hardware Options. For details, refer to the following manual.

    Σ-7-Series Σ-7S/Σ-7W SERVOPACK with Dynamic Brake Hardware Option Specifications Product Manual (Manual No.: SIEP S800001 73)
- Do not use the dynamic brake for any application other than an emergency stop.
  There is a risk of failure due to rapid deterioration of elements in the SERVOPACK and the risk of unexpected operation, machine damage, burning, or injury.
- Implement interlock signals and other safety circuits external to the SERVOPACK to ensure safety in the overall system even if the following conditions occur.
  - SERVOPACK failure or errors caused by external factors
  - Shutdown of operation due to SERVOPACK detection of an error in self-diagnosis and the subsequent turning OFF or holding of output signals
  - Holding of the ON or OFF status of outputs from the SERVOPACK due to fusing or burning of output relays or damage to output transistors
  - Voltage drops from overloads or short-circuits in the 24-V output from the SERVOPACK and the subsequent inability to output signals
  - Unexpected outputs due to errors in the power supply, I/O, or memory that cannot be detected by the SERVOPACK through self-diagnosis.

  There is a risk of injury, device damage, or burning.
- Observe the setting methods that are given in the manual for the following parameters.
  - Parameters for absolute position detection when the axis type is set to a finite-length axis
  - Parameters for simple absolute infinite-length position control when the axis type is set to an infinite-length axis

    Σ-7-Series Σ-7C SERVOPACK Motion Control User's Manual (Manual No.: SIEP S800002 03)

  If any other methods are used, offset in the current position when the power supply is turned OFF and ON again may result in device damage.
- OL□□□48 (Zero Point Position Offset in Machine Coordinate System) is always valid when the axis type is set to a finite-length axis. Do not change the setting of OL□□□48 while the SERVOPACK is operating.
  There is a risk of machine damage or an accident.

⚠ CAUTION

- Always check to confirm the paths of axes when any of the following axis movement instructions are used in programs to ensure that the system operates safely.
  - Positioning (MOV)
  - Linear Interpolation (MVS)
  - Circular Interpolation (MCC or MCW)
  - Helical Interpolation (MCC or MCW)
  - Set-Time Positioning (MVT)
  - Linear Interpolation with Skip Function (SKP)
  - Zero Point Return (ZRN)
  - External Positioning (EXM)

Example

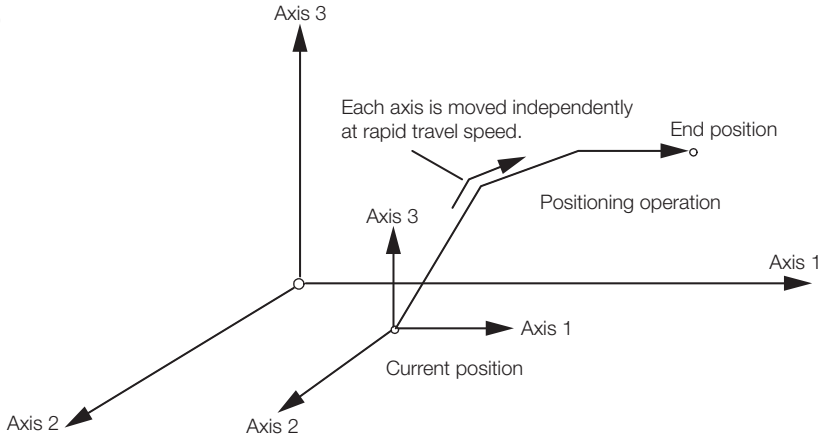

Example of Basic Path for Positioning (MOV) Instructions

There is a risk of injury or device damage.

- The travel path for the Positioning (MOV) instructions will not necessarily be a straight line. Check to confirm the paths of the axis when this instruction is used in programs to ensure that the system operates safely.
  There is a risk of injury or device damage.
- The Linear Interpolation (MVS) instruction can be used on both linear axes and rotary axes. However, if a rotary axis is included, the linear interpolation path will not necessarily be a straight line. Check to confirm the paths of the axis when this instruction is used in programs to ensure that the system operates safely.
  There is a risk of injury or device damage.
- The linear interpolation for the Helical Interpolation (MCW and MCC) instructions can be used for both linear axes and rotary axes. However, depending on how the linear axis is taken, the path of helical interpolation will not be a helix. Check to confirm the paths of the axis when this instruction is used in programs to ensure that the system operates safely.
  There is a risk of injury or device damage.
- Unexpected operation may occur if the following coordinate instructions are specified incorrectly: Always confirm that the following instructions are specified correctly before you begin operation.
  - Absolute Mode (ABS)
  - Incremental Mode (INC)
  - Current Position Set (POS)

Example

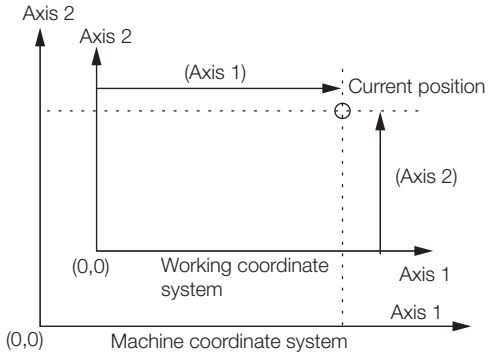

Example of Working Coordinate System Created with the Set Current Position (POS) Instruction

There is a risk of injury or device damage.

⚠ CAUTION

- The Move on Machine Coordinates (MVM) instruction temporarily performs positioning to a coordinate position in the machine coordinate system. Therefore, unexpected operation may occur if the instruction is executed without confirming the origin position in the machine coordinate system first. When you use the MVM instruction, always confirm that the machine origin is in the correct position before you begin operation.
  There is a risk of injury or device damage.

NOTICE

- When you adjust the gain during system commissioning, use a measuring instrument to monitor the torque waveform and speed waveform and confirm that there is no vibration.
  If a high gain causes vibration, the Servomotor will be damaged quickly.
- Do not frequently turn the power supply ON and OFF. After you have started actual operation, allow at least one hour between turning the power supply ON and OFF (as a guideline).
  Do not use the product in applications that require the power supply to be turned ON and OFF frequently.
  The elements in the SERVOPACK will deteriorate quickly.
- An alarm or warning may occur if communications are performed with the host controller during MPE720 or SigmaWin+ operation.
  If an alarm or warning occurs, it may interrupt the current process and stop the system.
- After you complete trial operation of the machine and facilities, use the MPE720 or the SigmaWin+ to create a backup file of the SERVOPACK parameters. You can use them to reset the parameters after SERVOPACK replacement.
  If you do not copy backed up parameter settings, normal operation may not be possible after a faulty SERVOPACK is replaced, possibly resulting in machine or equipment damage.

■ Maintenance and Inspection Precautions

⚠ DANGER

- Do not change any wiring while power is being supplied.
  There is a risk of electric shock or injury.

⚠ WARNING

- Wiring and inspections must be performed only by qualified engineers.
  There is a risk of electric shock or product failure.

⚠ CAUTION

- Wait for six minutes after turning OFF the power supply and then make sure that the CHARGE indicator is not lit before starting wiring or inspection work. Do not touch the power supply terminals while the CHARGE lamp is lit after turning OFF the power supply because high voltage may still remain in the SERVOPACK.
  There is a risk of electric shock.
- Before you replace a SERVOPACK, back up the settings of the SERVOPACK parameters. Copy the backed up parameter settings to the new SERVOPACK and confirm that they were copied correctly.
  If you do not copy backed up parameter settings or if the copy operation is not completed normally, normal operation may not be possible, possibly resulting in machine or equipment damage.
- Do not attempt to disassemble or repair the SERVOPACK.
  There is a risk of electric shock, injury, or device damage.

NOTICE

- Discharge all static electricity from your body before you operate any of the buttons or switches inside the front cover of the SERVOPACK.
  There is a risk of equipment damage.

■ Troubleshooting Precautions

⚠ DANGER

- If the safety device (molded-case circuit breaker or fuse) installed in the power supply line operates, remove the cause before you supply power to the SERVOPACK again. If necessary, repair or replace the SERVOPACK, check the wiring, and remove the factor that caused the safety device to operate.
  There is a risk of fire, electric shock, or injury.

⚠ WARNING

- The product may suddenly start to operate when the power supply is recovered after a momentary power interruption. Design the machine to ensure human safety when operation restarts.
  There is a risk of injury.

⚠ CAUTION

- When an alarm occurs, remove the cause of the alarm and ensure safety. Then reset the alarm or turn the power supply OFF and ON again to restart operation.
  There is a risk of injury or machine damage.
- If the Servo ON signal is input to the SERVOPACK and an alarm is reset, the Servomotor may suddenly restart operation. Confirm that the servo is OFF and ensure safety before you reset an alarm.
  There is a risk of injury or machine damage.
- Always insert a magnetic contactor in the line between the main circuit power supply and the main circuit power supply terminals on the SERVOPACK so that the power supply can be shut OFF at the main circuit power supply.
  If a magnetic contactor is not connected when the SERVOPACK fails, a large current may flow, possibly resulting in fire.
- If an alarm occurs, shut OFF the main circuit power supply.
  There is a risk of fire due to a regenerative resistor overheating as the result of regenerative transistor failure.
- Install a ground fault detector against overloads and short-circuiting or install a molded-case circuit breaker combined with a ground fault detector.
  There is a risk of SERVOPACK failure or fire if a ground fault occurs.
- The holding brake on a Servomotor will not ensure safety if there is the possibility that an external force (including gravity) may move the current position and create a hazardous situation when power is interrupted or an error occurs. If an external force may cause movement, install an external braking mechanism that ensures safety.

■ Disposal Precautions

- Correctly discard the product as stipulated by regional, local, and municipal laws and regulations. Be sure to include these contents in all labelling and warning notifications on the final product as necessary.

■ General Precautions

- Figures provided in this document are typical examples or conceptual representations. There may be differences between them and actual wiring, circuits, and products.
- The products shown in illustrations in this document are sometimes shown without covers or protective guards. Always replace all covers and protective guards before you use the product.
- If you need a new copy of this document because it has been lost or damaged, contact your nearest Yaskawa representative or one of the offices listed on the back of this document.
- This document is subject to change without notice for product improvements, specifications changes, and improvements to the manual itself.
  We will update the document number of the document and issue revisions when changes are made.
- Any and all quality guarantees provided by Yaskawa are null and void if the customer modifies the product in any way. Yaskawa disavows any responsibility for damages or losses that are caused by modified products.

Warranty

◆ Details of Warranty

■ Warranty Period

The warranty period for a product that was purchased (hereinafter called the “delivered product”) is one year from the time of delivery to the location specified by the customer or 18 months from the time of shipment from the Yaskawa factory, whichever is sooner.

■ Warranty Scope

Yaskawa shall replace or repair a defective product free of charge if a defect attributable to Yaskawa occurs during the above warranty period.
This warranty does not cover defects caused by the delivered product reaching the end of its service life and replacement of parts that require replacement or that have a limited service life.

This warranty does not cover failures that result from any of the following causes.

- Improper handling, abuse, or use in unsuitable conditions or in environments not described in product catalogs or manuals, or in any separately agreed-upon specifications
- Causes not attributable to the delivered product itself
- Modifications or repairs not performed by Yaskawa
- Use of the delivered product in a manner in which it was not originally intended
- Causes that were not foreseeable with the scientific and technological understanding at the time of shipment from Yaskawa
- Events for which Yaskawa is not responsible, such as natural or human-made disasters

◆ Limitations of Liability

- Yaskawa shall in no event be responsible for any damage or loss of opportunity to the customer that arises due to failure of the delivered product.
- Yaskawa shall not be responsible for any programs (including parameter settings) or the results of program execution of the programs provided by the user or by a third party for use with programmable Yaskawa products.
- The information described in product catalogs or manuals is provided for the purpose of the customer purchasing the appropriate product for the intended application. The use thereof does not guarantee that there are no infringements of intellectual property rights or other proprietary rights of Yaskawa or third parties, nor does it construe a license.
- Yaskawa shall not be responsible for any damage arising from infringements of intellectual property rights or other proprietary rights of third parties as a result of using the information described in catalogs or manuals.

◆ Suitability for Use

- It is the customer's responsibility to confirm conformity with any standards, codes, or regulations that apply if the Yaskawa product is used in combination with any other products.
- The customer must confirm that the Yaskawa product is suitable for the systems, machines, and equipment used by the customer.
- Consult with Yaskawa to determine whether use in the following applications is acceptable. If use in the application is acceptable, use the product with extra allowance in ratings and specifications, and provide safety measures to minimize hazards in the event of failure.
  - Outdoor use, use involving potential chemical contamination or electrical interference, or use in conditions or environments not described in product catalogs or manuals
  - Nuclear energy control systems, combustion systems, railroad systems, aviation systems, vehicle systems, medical equipment, amusement machines, and installations subject to separate industry or government regulations
  - Systems, machines, and equipment that may present a risk to life or property
  - Systems that require a high degree of reliability, such as systems that supply gas, water, or electricity, or systems that operate continuously 24 hours a day
  - Other systems that require a similar high degree of safety
- Never use the product for an application involving serious risk to life or property without first ensuring that the system is designed to secure the required level of safety with risk warnings and redundancy, and that the Yaskawa product is properly rated and installed.
- The circuit examples and other application examples described in product catalogs and manuals are for reference. Check the functionality and safety of the actual devices and equipment to be used before using the product.
- Read and understand all use prohibitions and precautions, and operate the Yaskawa product correctly to prevent accidental harm to third parties.

◆ Specifications Change

The names, specifications, appearance, and accessories of products in product catalogs and manuals may be changed at any time based on improvements and other reasons. The next editions of the revised catalogs or manuals will be published with updated code numbers. Consult with your Yaskawa representative to confirm the actual specifications before purchasing a product.

Compliance with UL Standards, EU Directives, and Other Safety Standards

Certification marks for the standards for which the product has been certified by certification bodies are shown on nameplate. Products that do not have the marks are not certified for the standards.

◆ North American Safety Standards (UL)

Product	Model	North American Safety Standards (UL File No.)
SERVOPACKs	• SGD7W-□□□□□□□□700 • SGD7C-□□□□□□□□700	UL 61800-5-1, CSA C22.2 No.274

◆ EU Directives

Product	Model	EU Directive	Harmonized Standards
SERVOPACKs	• SGD7W-□□□□□□□□700 • SGD7C-□□□□□□□□700	Machinery Directive 2006/42/EC	EN ISO13849-1: 2015
		EMC Directive 2014/30/EU	EN 55011 group 1, class A EN 61000-6-2 EN 61000-6-4 EN 61800-3 (Category C2, Second environment)
		Low Voltage Directive 2014/35/EU	EN 50178 EN 61800-5-1
		RoHS Directive 2011/65/EU	EN 50581

◆ Safety Standards

Product	Model	Safety Standards	Standards
SERVOPACKs	• SGD7W-□□□□□□□□700 • SGD7C-□□□□□□□□700	Safety of Machinery	EN ISO13849-1: 2015 IEC 60204-1
		Functional Safety	IEC 61508 series IEC 62061 IEC 61800-5-2
		EMC	IEC 61326-3-1

■ Safety Parameters

Item	Standards	Performance Level	
Safety Integrity Level	IEC 61508	SIL3	
	IEC 62061	SILCL3	
Mission Time	IEC 61508	10 years	20 years
Probability of Dangerous Failure per Hour	IEC 61508 IEC 62061	PFH = 4.04×10^{-9} [1/h] (4.04% of SIL3)	PFH = 4.05×10^{-9} [1/h] (4.05% of SIL3)
Performance Level	EN ISO 13849-1	PLe (Category 3)	
Mean Time to Dangerous Failure of Each Channel	EN ISO 13849-1	MTTFd: High	
Average Diagnostic Coverage	EN ISO 13849-1	DCavg: Medium	
Stop Category	IEC 60204-1	Stop category 0	
Safety Function	IEC 61800-5-2	STO	
Hardware Fault Tolerance	IEC 61508	HFT = 1	
Subsystem	IEC 61508	B	

Contents

About this Manual . . . iii
Finding Information . . . iii
Related Documents . . . vi
Using This Manual . . . xiii
Safety Precautions . . . xv
Warranty . . . xxvii
Compliance with UL Standards, EU Directives, and Other Safety Standards . . xxix

1 Basic Information on SERVOPACKs

1.1 SERVOPACKs with HWBB Function . . . 1-2

1.2 Interpreting the Nameplate . . . 1-3

1.3 Part Names . . . 1-4
1.3.1 Σ-7W . . . 1-4
1.3.2 Σ-7C . . . 1-5

1.4 Model Designations . . . 1-7
1.4.1 Σ-7W . . . 1-7
1.4.2 Σ-7C . . . 1-8

2 Selecting a SERVOPACK

2.1 General Specifications . . . 2-2
2.1.1 Σ-7W . . . 2-2
2.1.2 Σ-7C . . . 2-5

2.2 Block Diagrams . . . 2-7
2.2.1 SGD7W-1R6A and -2R8A . . . 2-7
2.2.2 SGD7W-5R5A and -7R6A . . . 2-8
2.2.3 SGD7C-1R6A and -2R8A . . . 2-9
2.2.4 SGD7C-5R5A and -7R6A . . . 2-10

2.3 External Dimensions . . . 2-11
2.3.1 Front Cover Dimensions and Connector Specifications . . . 2-11
2.3.2 SERVOPACK External Dimensions . . . 2-13

2.4 Examples of Standard Connections between SERVOPACKs and Peripheral Devices . . 2-15
2.4.1 Σ-7W . . . 2-15
2.4.2 Σ-7C . . . 2-17

3 SERVOPACK Installation

3.1 EMC Installation Conditions . . . 3-2
3.1.1 Σ-7W . . . 3-2
3.1.2 Σ-7C . . . 3-3

4 Wiring and Connecting SERVOPACKs

4.1 Wiring and Connecting SERVOPACKs 4-2

4.2 Basic Wiring Diagrams 4-5
4.2.1 Σ-7W 4-5
4.2.2 Σ-7C 4-6

4.3 Connecting the HWBB Function Signal 4-8
4.3.1 Safety Function Connector (CN8) Pin Arrangement 4-8
4.3.2 I/O Circuits 4-8

5 Safety Functions

5.1 Introduction to the HWBB Function 5-2
5.1.1 What Is the HWBB Function? 5-2
5.1.2 Precautions for the HWBB Function 5-2

5.2 HWBB Function 5-3
5.2.1 Risk Assessment 5-4
5.2.2 HWBB State 5-4
5.2.3 Resetting the HWBB State 5-7
5.2.4 Related Commands 5-8
5.2.5 Detecting Errors in HWBB Signal 5-9
5.2.6 HWBB Input Signal Specifications 5-9
5.2.7 HWBB Input Signal Waveform Trace 5-9
5.2.8 Operation without a Host Controller 5-10
5.2.9 /S-RDY (Servo Ready Output) Signal 5-10
5.2.10 /BK (Brake Output) Signal 5-11
5.2.11 Stopping Methods 5-11
5.2.12 ALM (Servo Alarm) Signal 5-11

5.3 EDM1 (External Device Monitor) 5-12
5.3.1 EDM1 Output Signal Specifications 5-12

5.4 HWBB Function Application Example 5-13
5.4.1 Connection Example 5-13
5.4.2 Failure Detection Method 5-13
5.4.3 Procedure 5-14

5.5 Validating the HWBB Function 5-15

5.6 Connecting the Safety Function Device 5-16

6 Maintenance

6.1 Alarm Displays 6-2
6.1.1 Alarms Related to the HWBB Function 6-2
6.1.2 Troubleshooting Alarms Related to the HWBB Function 6-3

6.2 Troubleshooting Based on the Operation and Conditions of the Servomotor . . 6-4

7 Appendices

7.1 Interpreting Panel Displays 7-2
7.1.1 Panel Display during the HWBB State 7-2
7.2 Corresponding SERVOPACK and SigmaWin+ Function Names . . 7-3
7.2.1 Corresponding SERVOPACK Monitor Display Function Names 7-3

Index

Revision History

Basic Information on SERVOPACKs

1

This chapter provides basic information on SERVOPACKs that have the HWBB function.

1.1 SERVOPACKs with HWBB Function 1-2

1.2 Interpreting the Nameplate 1-3

1.3 Part Names 1-4

1.3.1 Σ-7W 1-4
1.3.2 Σ-7C 1-5

1.4 Model Designations 1-7

1.4.1 Σ-7W 1-7
1.4.2 Σ-7C 1-8

1.1 SERVOPACKs with HWBB Function

Some SERVOPACKs are equipped with an HWBB function. Refer to the following chapter for details on the HWBB function.

☞ *Chapter 5 Safety Functions*

1.2 Interpreting the Nameplate

The following basic information is provided on the nameplate.

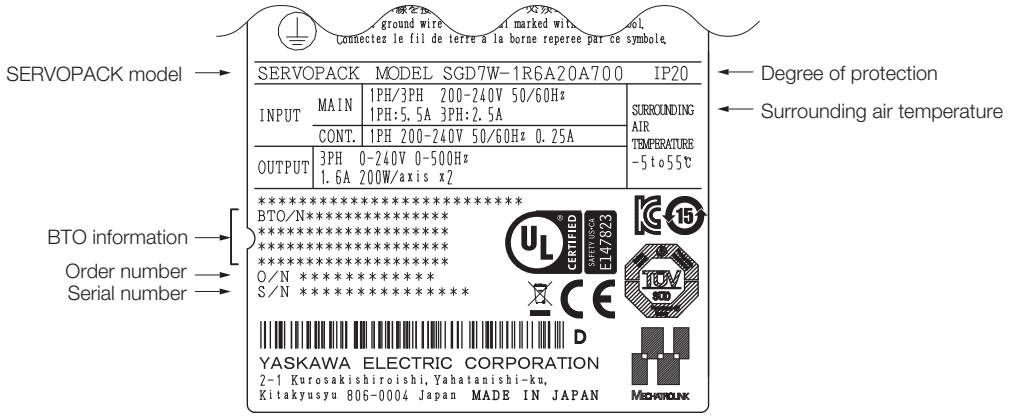

1.3 Part Names

The part names of the SERVOPACK are given below. Parts that are indicated by ▭ or ▭ are unique to the SERVOPACKs with the HWBB function.

1.3.1 Σ-7W

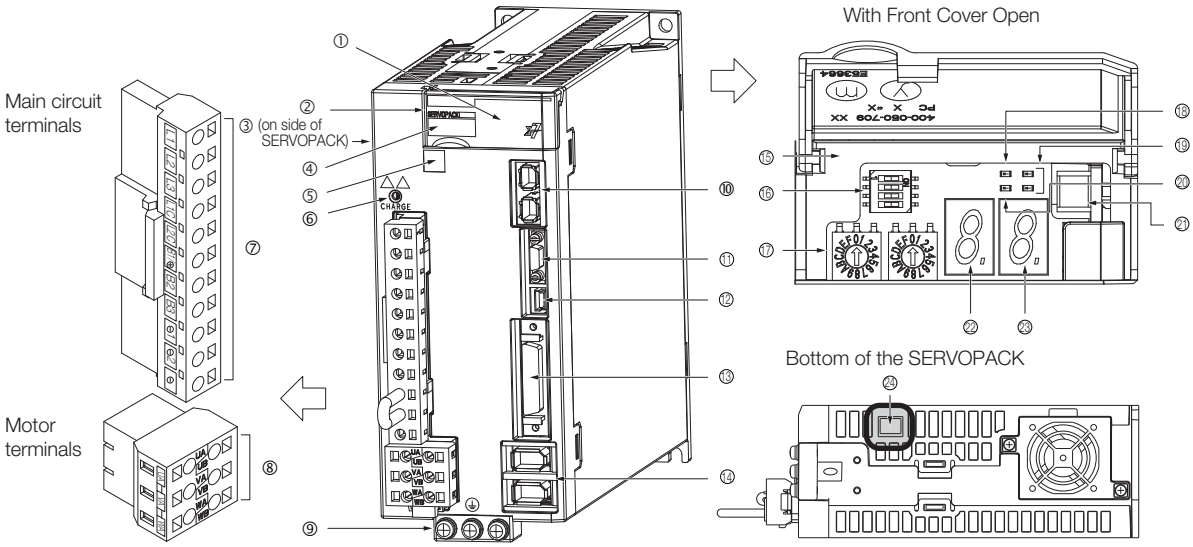

No.	Name	Description	Reference
①	Front Cover	–	–
②	Input Voltage	–	–
③	Nameplate	Indicates the SERVOPACK model and ratings.	–
④	Model	The model of the SERVOPACK.	–
⑤	QR Code	The QR code that is used by the MechatroCloud service.	–
⑥	CHARGE	Lit while the main circuit power is being supplied. Note: Even if you turn OFF the main circuit power supply, this indicator will be lit as long as the internal capacitor remains charged. Do not touch the main circuit or motor terminals while this indicator is lit. Doing so may result in electric shock.	–
⑦	Main Circuit Terminals	The terminals depend on the main circuit power supply input specifications of the SERVOPACK.	–
⑧	Servomotor Terminals (Axis A: UA, VA, and WA; Axis B: UB, VB, and WB)	The connection terminals for the Servomotor Main Circuit Cable (power line).	–
⑨	Ground Terminal (⏚)	The ground terminals to prevent electric shock. Always connect this terminal.	–
⑩	MECHATROLINK-III Communications Connector (CN6A and CN6B)	Connects to MECHATROLINK-III-compatible devices.	–
⑪	Serial Communications Connector (CN3)	Connects to the Digital Operator (a peripheral device) or a computer (RS-422).	–
⑫	Computer Connector (CN7)	A USB connector to connect a computer.	–
⑬	I/O Signal Connector (CN1)	Connects to sequence I/O signals.	–
⑭	Encoder Connectors (Axis A: CN2A, Axis B: CN2B)	• Rotary Servomotor: Connects to the encoder in the Servomotor. • Linear Servomotor: Connects to a Serial Converter Unit or linear encoder.	–
⑮	Serial Number	–	–
⑯	DIP Switch (S3)	Used to set MECHATROLINK-III communications.	–

Continued on next page.

Continued from previous page.

No.	Name	Description	Reference
⑰	Rotary Switches (S1 and S2)	Used to set the MECHATROLINK station address.	
⑱	PWR	Lights when the control power is being supplied.	–
⑲	L1, L2	Lights during MECHATROLINK communications.	–
⑳	CN	Lights when the SERVOPACK normally receives a CONNECT command.	–
㉑	Analog Monitor Connector (CN5)	You can use a special cable (peripheral device) to monitor the motor speed, torque reference, or other values.	–
㉒	Panel Display for Axis A	Displays the servo status with a seven-segment display.	–
㉓	Panel Display for Axis B		
㉔	Safety Connector (CN8)	Connects to a safety function device.	page 4-8

1.3.2 Σ-7C

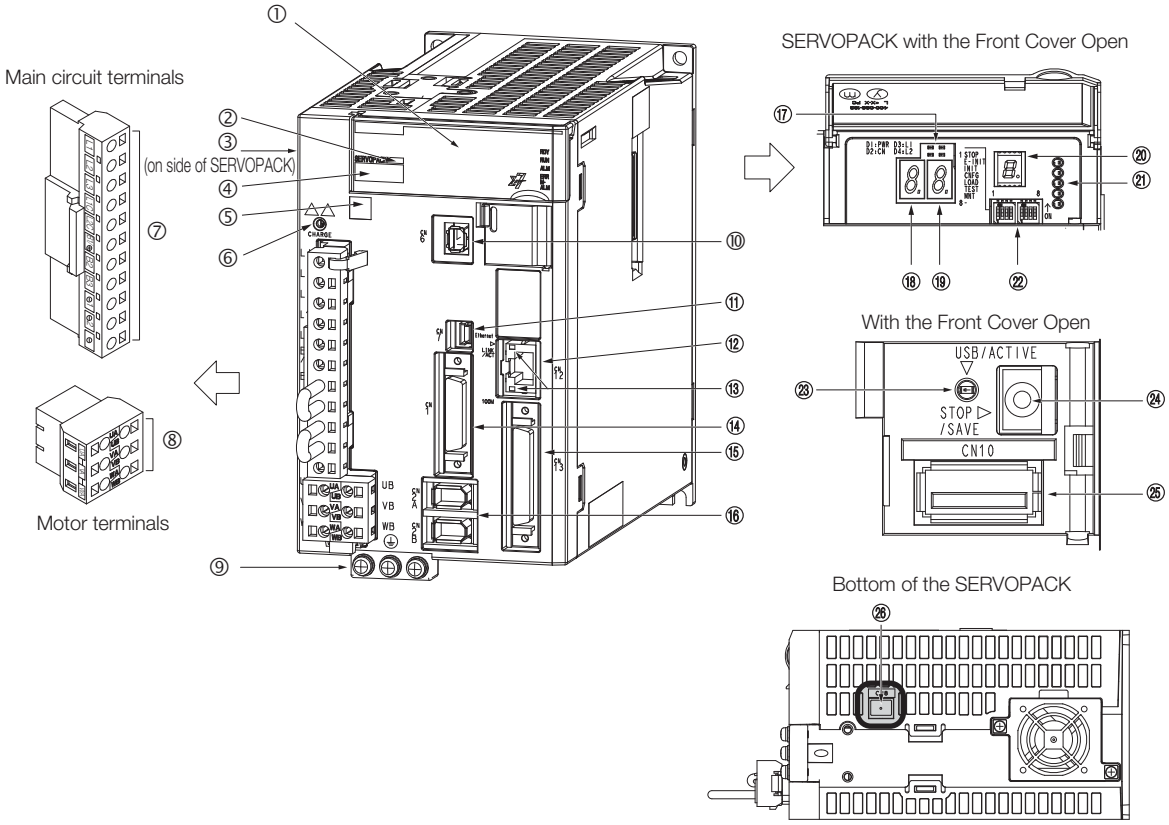

No.	Name	Description	Reference
①	Front Cover	–	–
②	Input Voltage	–	–
③	Nameplate	Indicates the SERVOPACK model and ratings.	–
④	Model	The model of the SERVOPACK.	–
⑤	QR Code	The QR code that is used by the MechatroCloud service.	–
⑥	CHARGE	Lit while the main circuit power is being supplied. Note: Even if you turn OFF the main circuit power supply, this indicator will be lit as long as the internal capacitor remains charged. Do not touch the main circuit or motor terminals while this indicator is lit. Doing so may result in electric shock.	–
⑦	Main Circuit Terminals	The terminals depend on the main circuit power supply input specifications of the SERVOPACK.	–

Continued on next page.

Continued from previous page.

No.	Name	Description	Reference
⑧	Servomotor Terminals (Axis A: UA, VA, and WA; Axis B: UB, VB, and WB)	These terminals are used to connect the main circuit cable (power line) to the Servomotor.	–
⑨	Ground Terminal(⏚)	The ground terminal helps prevent electric shock. Always connect this terminal.	–
⑩	MECHATROLINK-III Communications Connector (CN6)	Connects to MECHATROLINK-III-compatible devices.	–
⑪	Computer Connector (CN7)	A USB connector to connect a computer.	–
⑫	Ethernet Connector (CN12)	Connects to devices that support Ethernet communications.	–
⑬	Ethernet Status Indicators	Show the status of Ethernet communications.	–
⑭	I/O Signal Connector (CN1)	Connects the Servo Section sequence I/O signals.	–
⑮	I/O Signal Connector (CN13)	Connects the Controller Section sequence I/O signals.	–
⑯	Encoder Connectors (Axis A: CN2A, Axis B: CN2B)	• Rotary Servomotor: Connects to the encoder in the Servomotor. • Linear Servomotor: Connects to a Serial Converter Unit or linear encoder.	– –
⑰	Servo Section Indicators	Show the status of the control power supply.	–
⑱	Servo Section Display for Axis A	Displays the servo status with a seven-segment display.	–
⑲	Servo Section Display for Axis B		–
⑳	Controller Section Displays	Show the execution or error status of the CPU.	–
㉑	Controller Section Status Indicators	Show the status of the CPU.	–
㉒	DIP Switches: Mode Switches	Primarily used to set the operating mode of the CPU.	–
㉓	USB Status Indicator	Show the status of USB memory.	–
㉔	STOP/SAVE Switch	Use this switch when removing USB memory or batch-saving data to USB memory.	–
㉕	USB Connector (CN10)	Connects to USB memory.	–
㉖	Safety Connector (CN8)	Connects to a safety function device.	page 4-8

1.4 Model Designations

1.4.1 Σ-7W

SGD7W - 1R6 A 20 A 700 000 B

- Σ-7-Series Σ-7W SERVOPACKs
- 1st+2nd+3rd digits
- 4th digit
- 5th+6th digits
- 7th digit
- 8th+9th+10th digits
- 11th+12th+13th digits
- 14th digit

1st+2nd+3rd digits Maximum Applicable Motor Capacity per Axis

Voltage	Code	Specification
Three-Phase, 200 VAC	1R6*1	0.2 kW
	2R8*1	0.4 kW
	5R5*1,*2	0.75 kW
	7R6	1.0 kW

4th digit Voltage

Code	Specification
A	200 VAC

5th+6th digits Interface*3

Code	Specification
20	MECHATROLINK-III communications reference

7th digit Design Revision Order

A

8th+9th+10th digits Hardware Options Specification

Code	Specification	Applicable Models
700	HWBB function	All models

11th+12th+13th digits FT/EX Specification

Code	Specification
None	None
000	

14th digit BTO Specification*4

Code	Specification
None	None
B	BTO specification

*1. You can use these models with either a single-phase or three-phase input.
*2. If you use the Servomotor with a single-phase 200-VAC power supply input, derate the load ratio to 65%. An example is given below.
If the load ratio of the first axis is 90%, use a load ratio of 40% for the second axis so that average load ratio for both axes is 65%.
((90% + 40%)/2 = 65%)
*3. The same interface is used for both Rotary Servomotors and Linear Servomotors.
*4. The BTO specification indicates if the SEVOPACK is customized by using the MechatroCloud BTO service. This service is available on the e-mechatronics website. You need a BTO number to order SERVOPACKs with customized specifications.
Refer to the following catalog for details on the BTO specification.
AC Servo Drives Σ-7 Series (Manual No.: KAEP S800001 23)

1.4.2 Σ-7C

SGD7C - 1R6 A MA A 001

Σ-7-Series
Σ-7C SERVOPACKs

1st+2nd+3rd digits | 4th digit | 5th+6th digits | 7th digit | 8th+9th+10th digits

1st+2nd+3rd digits Maximum Applicable Motor Capacity per Axis

Voltage	Code	Specification
Three-Phase, 200 VAC	1R6*1	0.2 kW
	2R8*1	0.4 kW
	5R5*1,*2	0.75 kW
	7R6	1.0 kW

4th digit Voltage

Code	Specification
A	200 VAC

5th+6th digits Interface*3

Code	Specification
MA	Bus connection references

7th digit Design Revision Order

A

8th+9th+10th digits Hardware Option Specification

Code	Specification	Applicable Models
None	Without options	All models
000		
001	Rack-mounted	
002	Varnished	
020*4	No dynamic brake	SGD7C-1R6A to -2R8A
	External dynamic brake resistor	SGD7C-5R5A to -7R6A
700*5	HWBB option	All models

*1. You can use these models with either a single-phase or three-phase input.
*2. If you use the Servomotor with a single-phase 200-VAC power supply input, derate the load ratio to 65%. An example is given below.
If the load ratio of the first axis is 90%, use a load ratio of 40% for the second axis so that average load ratio for both axes is 65%.
((90% + 40%)/2 = 65%)
*3. The same interface is used for both Rotary Servomotors and Linear Servomotors.
*4. Refer to the following manual for details.
Σ-7-Series Σ-7S/Σ-7W SERVOPACK with Hardware Option Specifications Dynamic Brake Product Manual (Manual No.: SIEP S800001 73)
*5. Refer to the following manual for details.
Σ-7-Series Σ-7W SERVOPACK with Hardware Option Specifications HWBB Function Product Manual (Manual No.: SIEP S800001 72)

Selecting a SERVOPACK

2

This chapter provides information required to select SERVOPACKs, such as general specifications, block diagrams, connector specifications, external dimensions, and connection examples.

2.1 General Specifications 2-2

2.1.1 Σ-7W 2-2
2.1.2 Σ-7C 2-5

2.2 Block Diagrams 2-7

2.2.1 SGD7W-1R6A and -2R8A 2-7
2.2.2 SGD7W-5R5A and -7R6A 2-8
2.2.3 SGD7C-1R6A and -2R8A 2-9
2.2.4 SGD7C-5R5A and -7R6A 2-10

2.3 External Dimensions 2-11

2.3.1 Front Cover Dimensions and Connector Specifications 2-11
2.3.2 SERVOPACK External Dimensions 2-13

2.4 Examples of Standard Connections between SERVOPACKs and Peripheral Devices . . 2-15

2.4.1 Σ-7W 2-15
2.4.2 Σ-7C 2-17

2.1 General Specifications

This section gives the general specifications of SERVOPACKs.

Specifications that are indicated by ▭ are unique to the SERVOPACKs with the HWBB function.

2.1.1 Σ-7W

Item		Specification
Control Method		IGBT-based PWM control, sine wave current drive
Feedback	With Rotary Servomotor	Serial encoder: 20 bits or 24 bits (incremental encoder/absolute encoder) 22 bits (absolute encoder)
	With Linear Servomotor	• Absolute linear encoder (The signal resolution depends on the absolute linear encoder.) • Incremental linear encoder (The signal resolution depends on the incremental linear encoder or Serial Converter Unit.)
Environmental Conditions	Surrounding Air Temperature	-5°C to 55°C (With derating, usage is possible between 55°C and 60°C.) Refer to the following manual for derating specifications. Σ-7-Series Σ-7W SERVOPACK with MECHATROLINK-III Communications References Product Manual (Manual No.: SIEP S800001 29)
	Storage Temperature	-20°C to 85°C
	Surrounding Air Humidity	95% relative humidity max. (with no freezing or condensation)
	Storage Humidity	95% relative humidity max. (with no freezing or condensation)
	Vibration Resistance	4.9 m/s^2
	Shock Resistance	19.6 m/s^2
	Degree of Protection	IP20
	Pollution Degree	2 • Must be no corrosive or flammable gases. • Must be no exposure to water, oil, or chemicals. • Must be no dust, salts, or iron dust.
	Altitude	1,000 m max. (With derating, usage is possible between 1,000 m and 2,000 m.) Refer to the following manual for derating specifications. Σ-7-Series Σ-7W SERVOPACK with MECHATROLINK-III Communications References Product Manual (Manual No.: SIEP S800001 29)
	Others	Do not use the SERVOPACK in the following locations: Locations subject to static electricity, noise, strong electromagnetic/magnetic fields, or radioactivity
Applicable Standards		Refer to the following section for details. *Compliance with UL Standards, EU Directives, and Other Safety Standards* on page xxix
Mounting		Base-mounted Note: Rack-mounted SERVOPACKs are not available.
Performance	Speed Control Range	1:5000 (At the rated torque, the lower limit of the speed control range must not cause the Servomotor to stop.)
	Coefficient of Speed Fluctuation*1	±0.01% of rated speed max. (for a load fluctuation of 0% to 100%)
		0% of rated speed max. (for a load fluctuation of ±10%)
		±0.1% of rated speed max. (for a temperature fluctuation of 25°C ±25°C)
	Torque Control Precision (Repeatability)	±1%
	Soft Start Time Setting	0 s to 10 s (Can be set separately for acceleration and deceleration.)

Continued on next page.

Continued from previous page.

Item			Specification
I/O Signals	Linear Servomotor Overheat Protection Signal Input		Number of input points: 2 Input voltage range: 0 V to +5 V
	Sequence Input Signals	Input Signals That Can Be Allocated	Allowable voltage range: 24 VDC ±20% Number of input points: 12 (Input method: Sink inputs or source inputs)
			Input Signals • /DEC (Origin Return Deceleration Switch) signal • /EXT1 to /EXT3 (External Latch Input 1 to 3) signals • P-OT (Forward Drive Prohibit) and N-OT (Reverse Drive Prohibit) signals A signal can be allocated and the positive and negative logic can be changed.
	Sequence Output Signals	Fixed Output	Allowable voltage range: 5 VDC to 30 VDC Number of output points: 2 (A photocoupler output (isolated) is used.)
			Output signal: ALM (Servo Alarm) signal
		Output Signals That Can Be Allocated	Allowable voltage range: 5 VDC to 30 VDC Number of output points: 5 (A photocoupler output (isolated) is used.)
			Output Signals • /COIN (Positioning Completion) signal • /V-CMP (Speed Coincidence Detection) signal • /TGON (Rotation Detection) signal • /S-RDY (Servo Ready) signal • /CLT (Torque Limit Detection) signal • /VLT (Speed Limit Detection) signal • /BK (Brake) signal • /WARN (Warning) signal • /NEAR (Near) signal A signal can be allocated and the positive and negative logic can be changed.
Communications	RS-422A Communications (CN3)	Interfaces	Digital Operator (JUSP-OP05A-1-E) and personal computer (with SigmaWin+)
		1:N Communications	Up to N = 15 stations possible for RS-422A port
		Axis Address Settings	Set with parameters.
	USB Communications (CN7)	Interface	Personal computer (with SigmaWin+)
		Communications Standard	Conforms to USB2.0 standard (12 Mbps).
Displays/Indicators			CHARGE, PWR, COM, L1, and L2 indicators, and two, one-digit seven-segment displays
MECHATROLINK-III Communications	Communications Protocol		MECHATROLINK-III
	Station Address Settings		03 to EF hex (maximum number of slaves: 62) The rotary switches (S1 and S2) are used to set the station address.
	Extended Address Setting		Axis A: 00 hex, Axis B: 01 hex
	Baud Rate		100 Mbps
	Transmission Cycle		250 μs, 500 μs, 750 μs, 1.0 ms to 4.0 ms (multiples of 0.5 ms)
	Number of Transmission Bytes		32 or 48 bytes per station A DIP switch (S3) is used to select the number of transmission bytes.

Continued on next page.

Continued from previous page.

Item		Specification
Reference Method	Performance	Position, speed, or torque control with MECHATROLINK-III communications
	Reference Input	MECHATROLINK-III commands (sequence, motion, data setting, data access, monitoring, adjustment, etc.)
	Profile	MECHATROLINK-III standard servo profile
MECHATROLINK-III Communications Setting Switches		Rotary switch (S1 and S2) positions: 16
		Number of DIP switch (S3) pins: 4
Analog Monitor (CN5)		Number of points: 2 Output voltage range: ±10 VDC (effective linearity range: ±8 V) Resolution: 16 bits Accuracy: ±20 mV (Typ) Maximum output current: ±10 mA Settling time (±1%): 1.2 ms (Typ)
Dynamic Brake (DB)		Activated when a servo alarm or overtravel (OT) occurs, or when the power supply to the main circuit or servo is OFF.
Regenerative Processing		Built-in
Overtravel (OT) Prevention		Stopping with dynamic brake, deceleration to a stop, or coasting to a stop for the P-OT (Forward Drive Prohibit) or N-OT (Reverse Drive Prohibit) signal
Protective Functions		Overcurrent, overvoltage, low voltage, overload, regeneration error, etc.
Utility Functions		Gain adjustment, alarm history, jogging, origin search, etc.
Safety Functions	Inputs	/HWBB1 and /HWBB2: Base block signals for Power Modules
	Output	EDM1: Monitors the status of built-in safety circuit (fixed output).
	Applicable Standards*2	ISO13849-1 PLe (Category 3), IEC61508 SIL3
Applicable Option Modules		None

*1. The coefficient of speed fluctuation for load fluctuation is defined as follows:

$$\text{Coefficient of speed fluctuation} = \frac{\text{No-load motor speed - Total-load motor speed}}{\text{Rated motor speed}} \times 100\%$$

*2. Always perform risk assessment for the system and confirm that the safety requirements are met.

2.1.2 Σ-7C

This section gives the general specifications of Σ-7C SERVOPACKs and the specifications of the Servo Section. Refer to the following manual for the specifications of the Controller Section.
Σ-7-Series Σ-7C SERVOPACK Product Manual (Manual No.: SIEP S800002 04)

General Specifications

Item		Specification
Control Method		IGBT-based PWM control, sine wave current drive
Feedback	With Rotary Servomotor	Serial encoder: 17 bits (absolute encoder) 20 bits or 24 bits (incremental encoder/absolute encoder) 22 bits (absolute encoder)
	With Linear Servomotor	• Absolute linear encoder (The signal resolution depends on the absolute linear encoder.) • Incremental linear encoder (The signal resolution depends on the incremental linear encoder or Serial Converter Unit.)
Environmental Conditions	Surrounding Air Temperature	0°C to 55°C
	Storage Temperature	-20°C to 85°C
	Surrounding Air Humidity	10% to 95% relative humidity (with no freezing or condensation)
	Storage Humidity	10% to 95% relative humidity (with no freezing or condensation)
	Vibration Resistance	4.9 m/s^2
	Shock Resistance	19.6 m/s^2
	Protection Class	IP20
	Pollution Degree	2 • Must be no corrosive or flammable gases. • Must be no exposure to water, oil, or chemicals. • Must be no excessive dust, salts, or iron dust.
	Altitude	1,000 m max. Note: With derating, usage is possible between 1,000 m and 2,000 m. Refer to the following manual for derating specifications. Σ-7-Series Σ-7C SERVOPACK Product Manual (Manual No.: SIEP S800002 04)
	Power Frequency Magnetic Field	30 A/m (50 Hz/60 Hz), IEC 61000-4-8, Level 4
	Others	Must be no exposure to static electricity, noise or radioactivity.
Applicable Standards		Refer to the following section for details. *Compliance with UL Standards, EU Directives, and Other Safety Standards* on page xxix
Mounting		Base-mounted Note: Rack-mounted SERVOPACKs are not available.

Servo Section Specifications

Item		Specification
Performance	Speed Control Range	1:5000 (At the rated torque, the lower limit of the speed control range must not cause the Servomotor to stop.)
	Coefficient of Speed Fluctuation*1	±0.01% of rated speed max. (for a load fluctuation of 0% to 100%)
		0% of rated speed max. (for a voltage fluctuation of ±10%)
		±0.1% of rated speed max. (for a temperature fluctuation of 25°C ±25°C)
	Torque Control Precision (Repeatability)	±1%
	Soft Start Time Setting	0 s to 10 s (Can be set separately for acceleration and deceleration.)

Continued on next page.

Continued from previous page.

Item			Specification
I/O Signals	Linear Servomotor Overheat Protection Signal Input		Number of input points: 2 Input voltage range (0 V to 5 V)
	Sequence Input Signals	Input Signals That Can Be Allocated	Allowable voltage range: 24 VDC ±20% Number of input points: 12 (Input method: Sink inputs or source inputs)
			Input Signals: • P-OT (Forward Drive Prohibit Input) and N-OT (Reverse Drive Prohibit Input) signals • /P-CL (Forward External Torque Limit) and /N-CL (Reverse External Torque Limit) signals • /DEC (Origin Return Deceleration Switch) signal • /EXT1 to /EXT3 (External Latch Input 1 to 3) signals • FSTP (Forced Stop Input) signal A signal can be allocated and the positive and negative logic can be changed.
	Sequence Output Signals	Fixed Outputs	Allowable voltage range: 5 VDC to 30 VDC Number of output points: 2 (Photocoupler outputs (isolated) are used.)
			Output signal: ALM (Servo Alarm Output) signal
		Output Signals That Can Be Allocated	Allowable voltage range: 5 VDC to 30 VDC Number of outputs points: 5 (Photocoupler outputs (isolated) are used.)
			Output Signals: • /COIN (Positioning Completion) signal • /V-CMP (Speed Coincidence Detection) signal • /TGON (Rotation Detection) signal • /S-RDY (Servo Ready) signal • /CLT (Torque Limit Detection) signal • /VLT (Speed Limit Detection) signal • /BK (Brake) signal • /WARN (Warning) signal • /NEAR (Near) signal A signal can be allocated and the positive and negative logic can be changed.
Communications	USB Communications (CN7)	Interface	Personal computer (with SigmaWin+)
		Communications Standard	Conforms to USB2.0 standard (12 Mbps).
Displays/Indicators			CHARGE and PWR indicators, and two, one-digit seven-segment displays
Reference Method			Reference with built-in controller
Dynamic Brake (DB)			Activated when a servo alarm or overtravel (OT) occurs, or when the power supply to the main circuit or servo is OFF.
Regenerative Processing			Built-in
Overtravel (OT) Prevention			Stopping with dynamic brake, deceleration to a stop, or coasting to a stop for the P-OT (Forward Drive Prohibit Input) or N-OT (Reverse Drive Prohibit Input) signal
Protective Functions			Overcurrent, overvoltage, undervoltage, overload, regeneration error, etc.
Utility Functions			Gain adjustment, alarm history, jogging, origin search, etc.
Safety Functions	Inputs		/HWBB1 and /HWBB2: Base block signals for Power Modules
	Output		EDM1: Monitors the status of built-in safety circuit (fixed output).
	Applicable Standards*2		ISO13849-1 PLe (Category 3), IEC61508 SIL3
Applicable Option Modules			None

*1. The coefficient of speed fluctuation for load fluctuation is defined as follows:

$$\text{Coefficient of speed fluctuation} = \frac{\text{No-load motor speed - Total-load motor speed}}{\text{Rated motor speed}} \times 100\%$$

*2. Always perform risk assessment for the system and confirm that the safety requirements are met.

2.2 Block Diagrams

This section gives the block diagrams of SERVOPACKs with the HWBB function. For the Σ-7C SERVOPACKs, a block diagram is given for the Servo Section only.

Parts that are indicated by ▭ are unique to the SERVOPACKs with the HWBB function.

2.2.1 SGD7W-1R6A and -2R8A

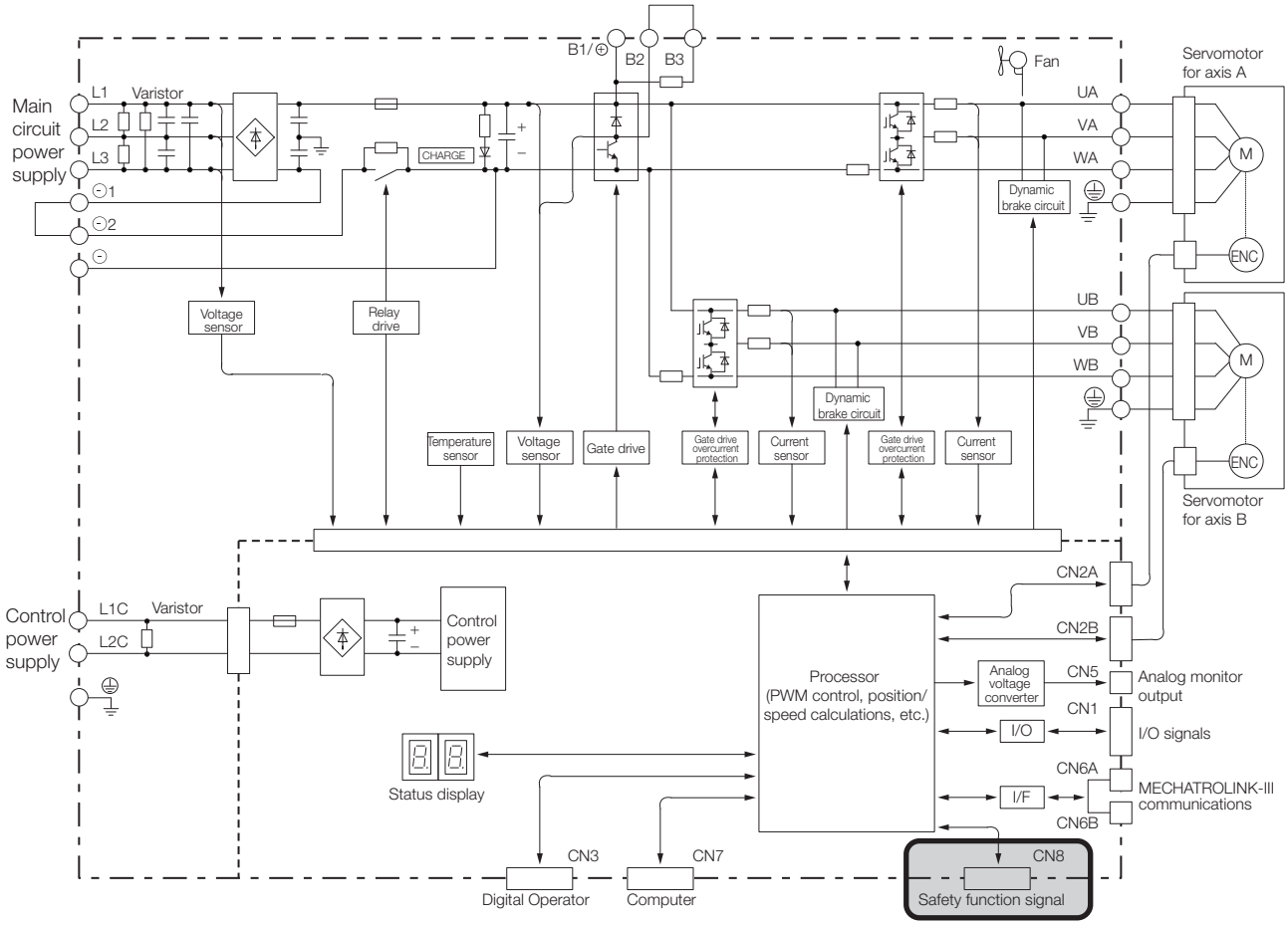

2.2.2 SGD7W-5R5A and -7R6A

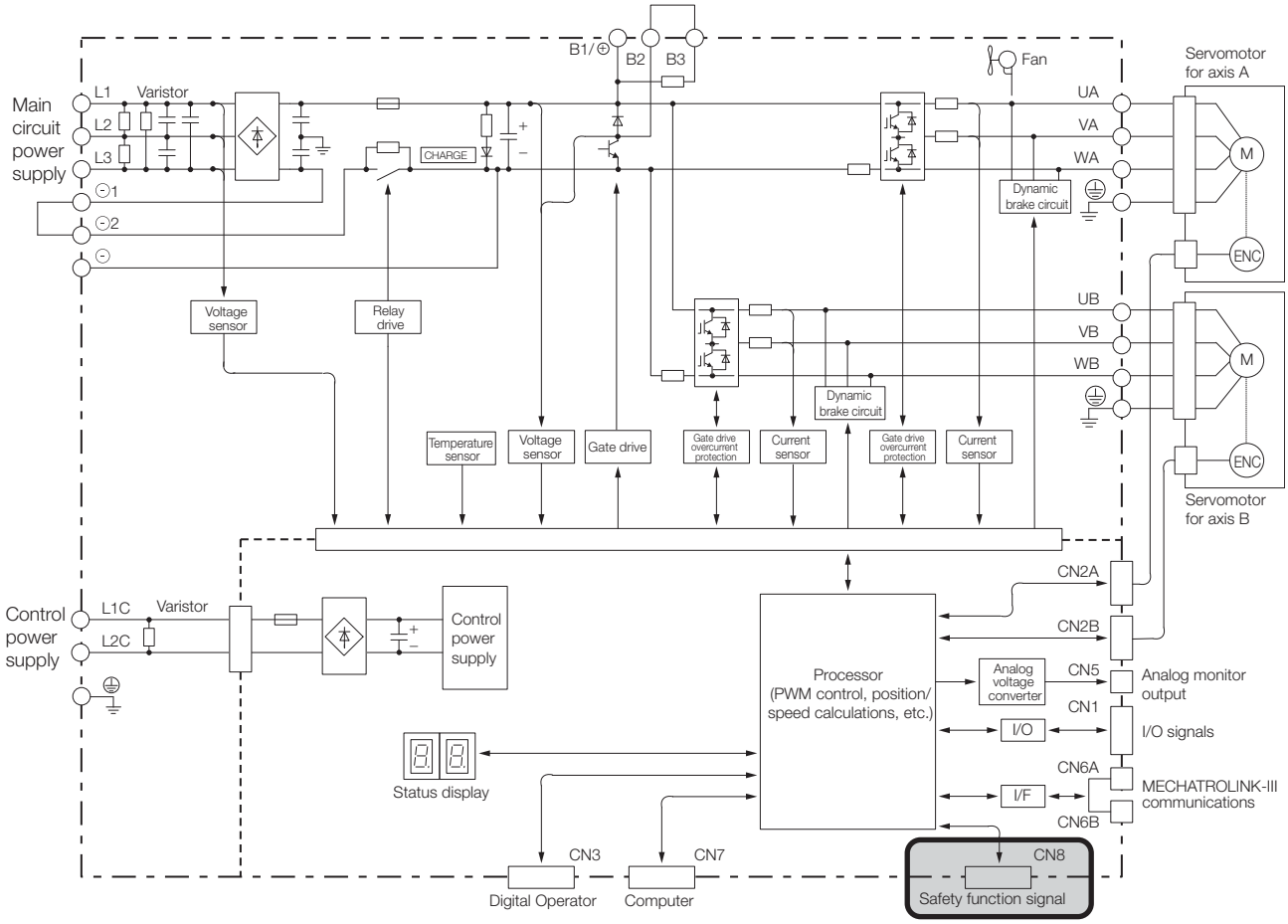

2.2.3 SGD7C-1R6A and -2R8A

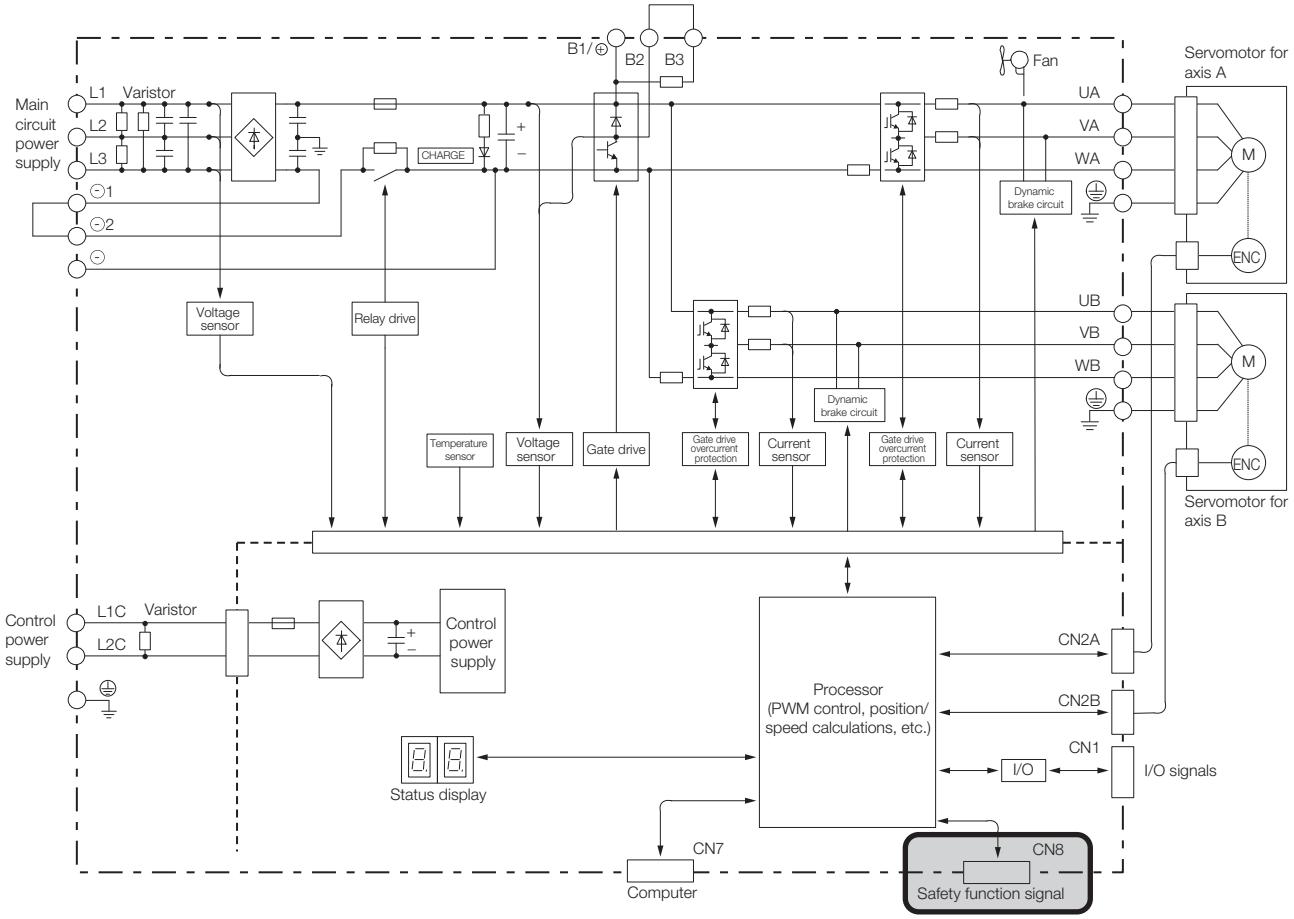

2.2.4 SGD7C-5R5A and -7R6A

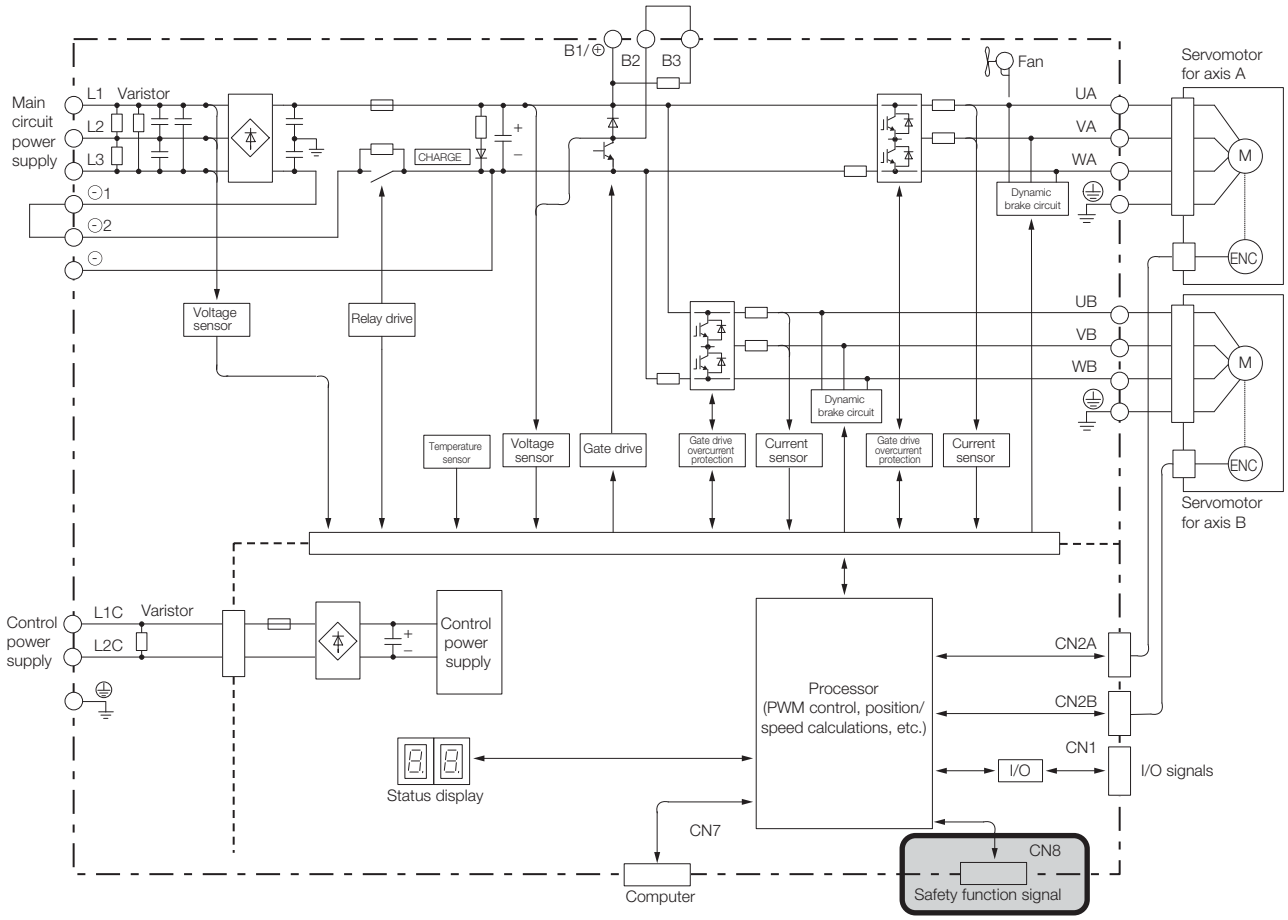

2.3 External Dimensions

2.3.1 Front Cover Dimensions and Connector Specifications

This section gives the front cover dimensions and connector specifications. Parts that are indicated by ▭ or ▭ are unique to the SERVOPACKs with the HWBB function.

Σ-7W

- Front Cover Dimensions

The front cover dimensions are the same for all models.

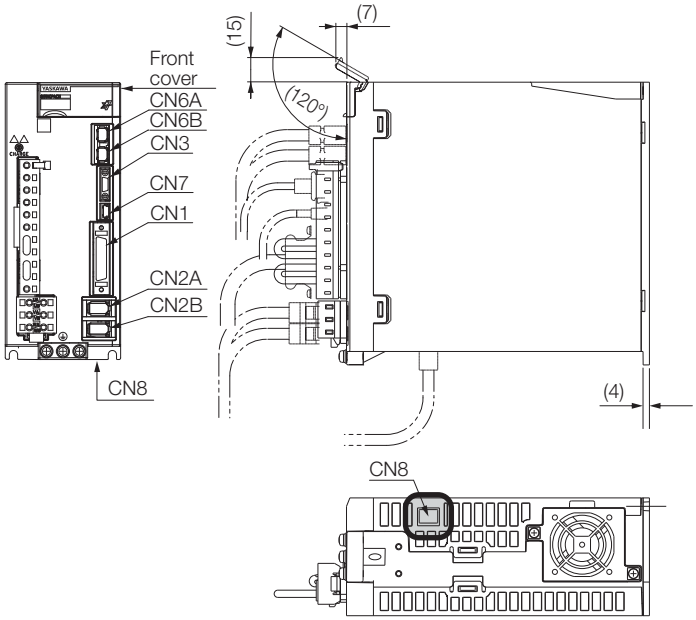

- Connector Specifications

Connector No.	Model	Number of Pins	Manufacturer
CN1	10236-59A3MB	36	3M Japan Limited
CN2A, CN2B	3E106-2230KV	6	3M Japan Limited
CN3	HDR-EC14LFDTN-SLD-PLUS	14	Honda Tsushin Kogyo Co., Ltd.
CN6A, CN6B	1981386-1	8	Tyco Electronics Japan G.K.
CN7	2172034-1	5	Tyco Electronics Japan G.K.
CN8	1981080-1	8	Tyco Electronics Japan G.K.

Note: The above connectors or their equivalents are used for the SERVOPACKs.

Σ-7C

The front cover dimensions and panel connector section are the same for all models. Refer to the following figures and table.

- Front Cover Dimensions

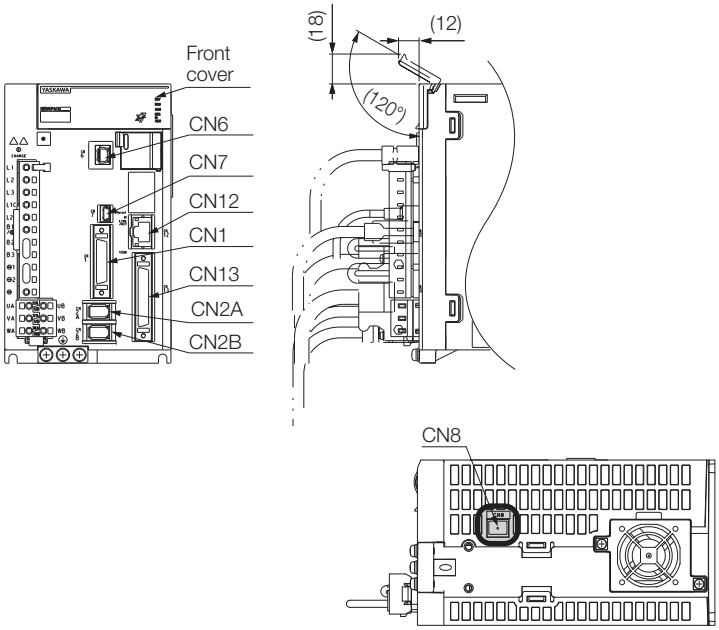

- Connector Specifications

Connector No.	Model	Number of Pins	Manufacturer
CN1	10236-59A3MB	36	3M Japan Limited
CN2A, CN2B	3E106-2230KV	6	3M Japan Limited
CN6	1981386-1	8	Tyco Electronics Japan G.K.
CN7	2172034-1	5	Tyco Electronics Japan G.K.
CN8	1981080-1	8	Tyco Electronics Japan G.K.
CN12	26-51024KB13-1	8	UDE Corp.
CN13	10250-52A3PL	50	3M Japan Limited

Note: The above connectors or their equivalents are used for the SERVOPACKs.

2.3.2 SERVOPACK External Dimensions

Σ-7W

- Three-phase, 200 VAC: SGD7W-1R6A and -2R8A

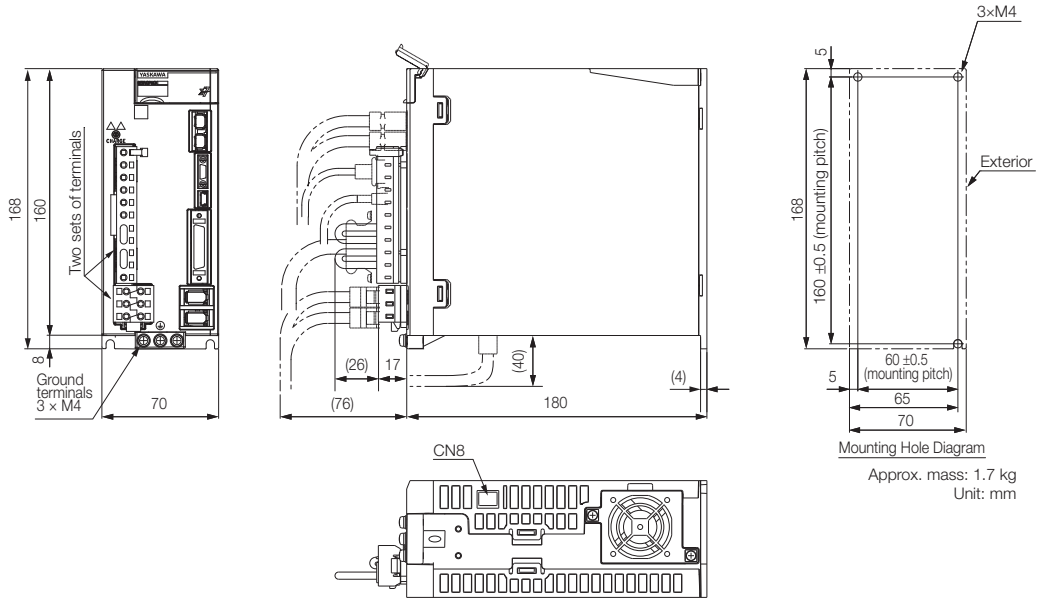

Approx. mass: 1.7 kg
Unit: mm

- Three-phase, 200 VAC: SGD7W-5R5A and -7R6A

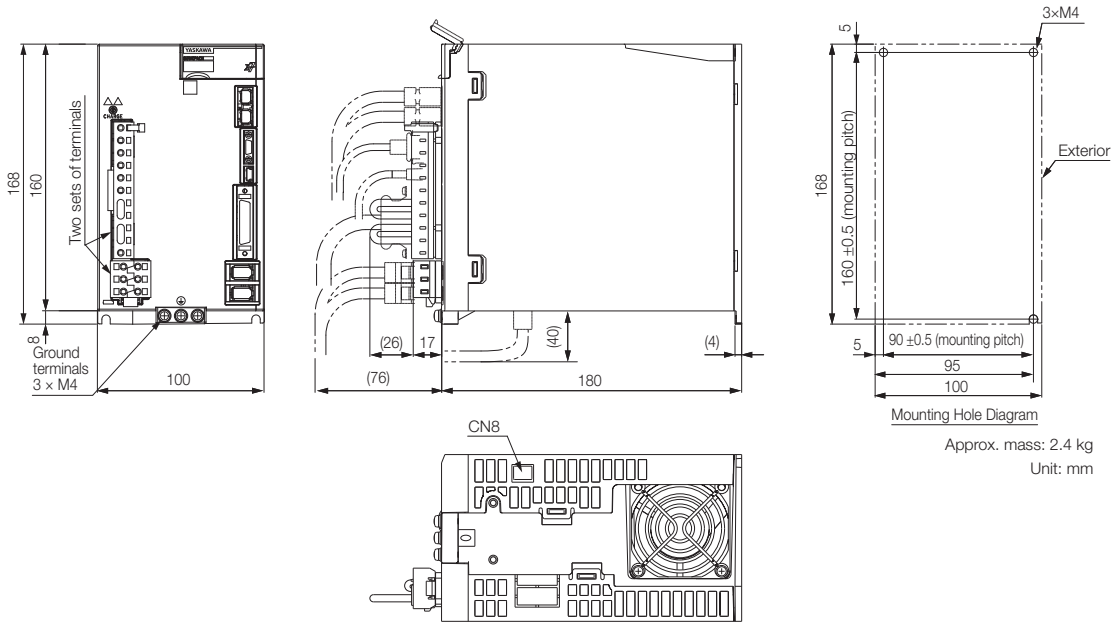

Approx. mass: 2.4 kg
Unit: mm

Σ-7C

- Three-phase, 200 VAC: SGD7C-1R6A and -2R8A

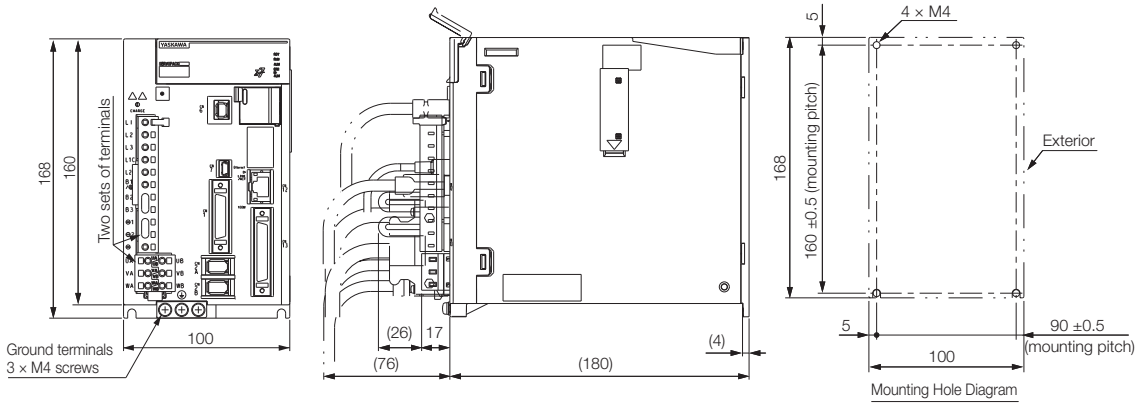

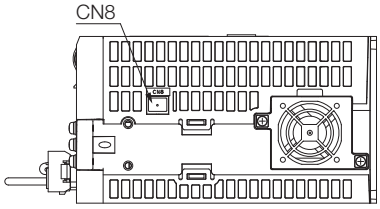

Approx. mass: 2.0 kg
Unit: mm

- Three-phase, 200 VAC: SGD7C-5R5A and -7R6A

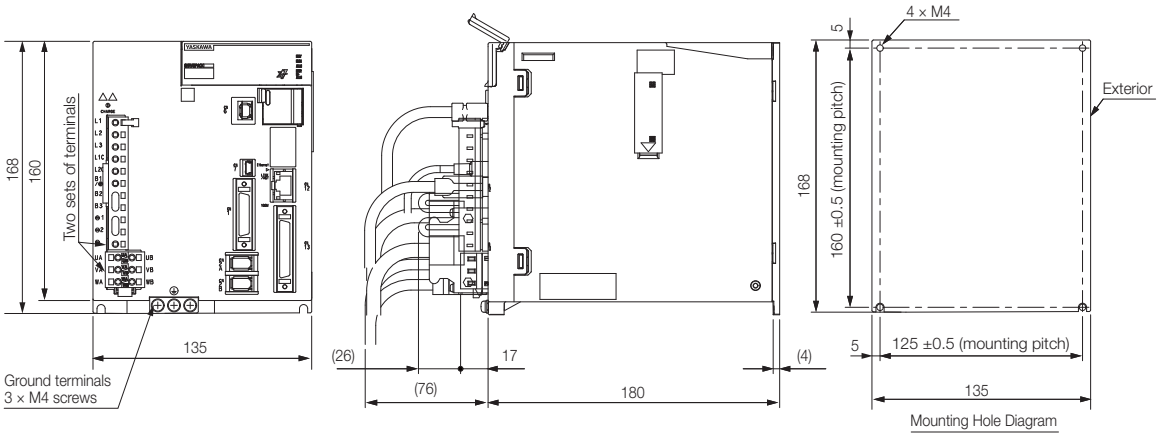

Approx. mass: 2.8 kg
Unit: mm

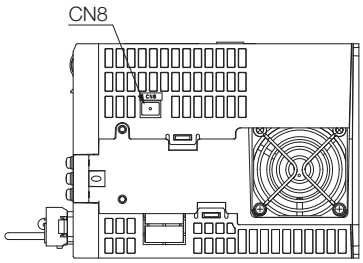

2.4 Examples of Standard Connections between SERVOPACKs and Peripheral Devices

This section provides connection examples between the SERVOPACK and peripheral devices. Parts that are indicated by ▭ are unique to the SERVOPACKs with the HWBB function.

2.4.1 Σ-7W

• Rotary Servomotors

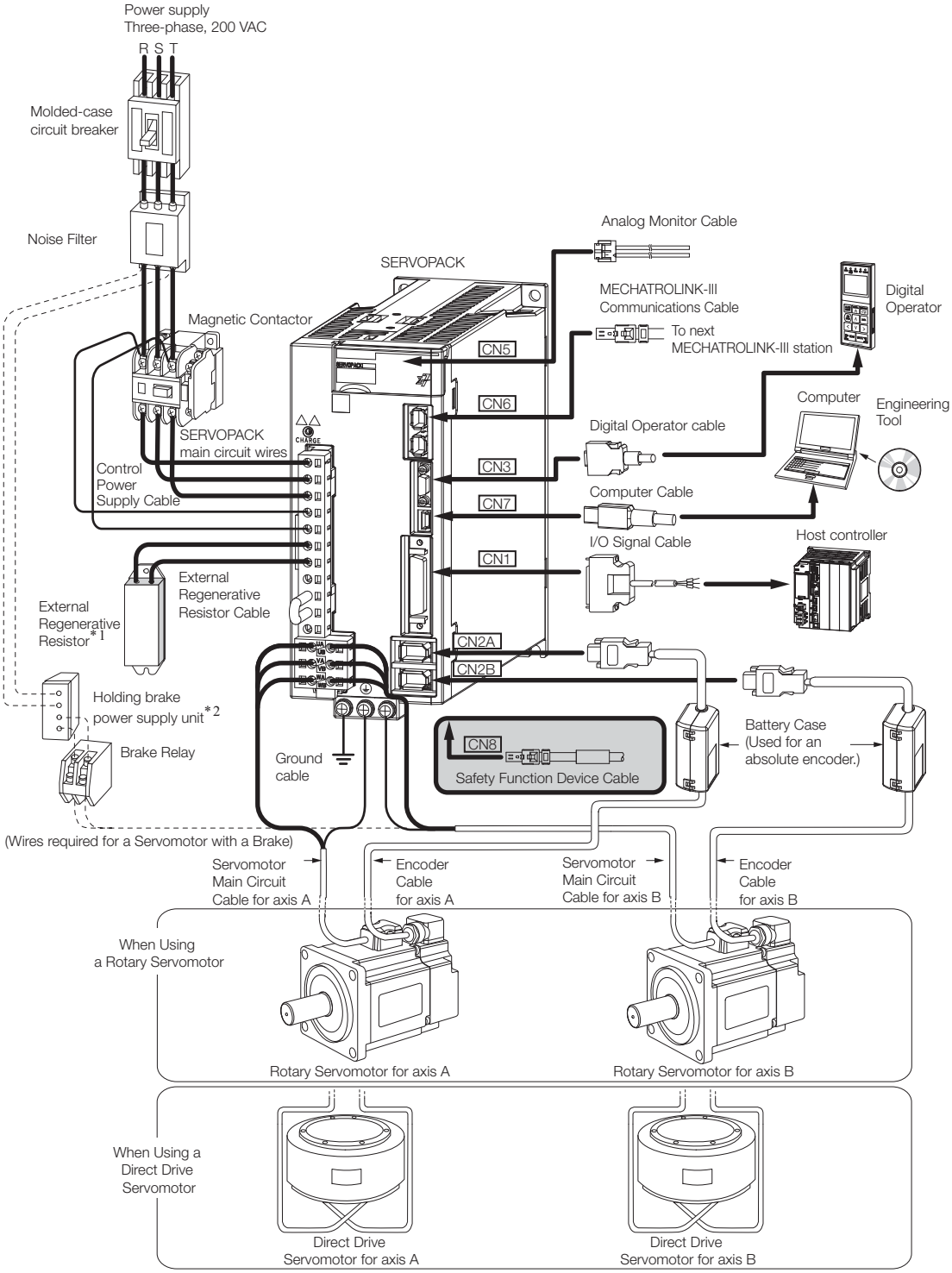

*1. External Regenerative Resistors are not provided by Yaskawa.
*2. The power supply for the holding brake is not provided by Yaskawa. Select a power supply based on the holding brake specifications. If you use a 24-V brake, install a separate power supply for the 24-VDC power supply from other power supplies, such as the one for the I/O signals of the CN1 connector.
If the power supply is shared, the I/O signals may malfunction.

• Linear Servomotors

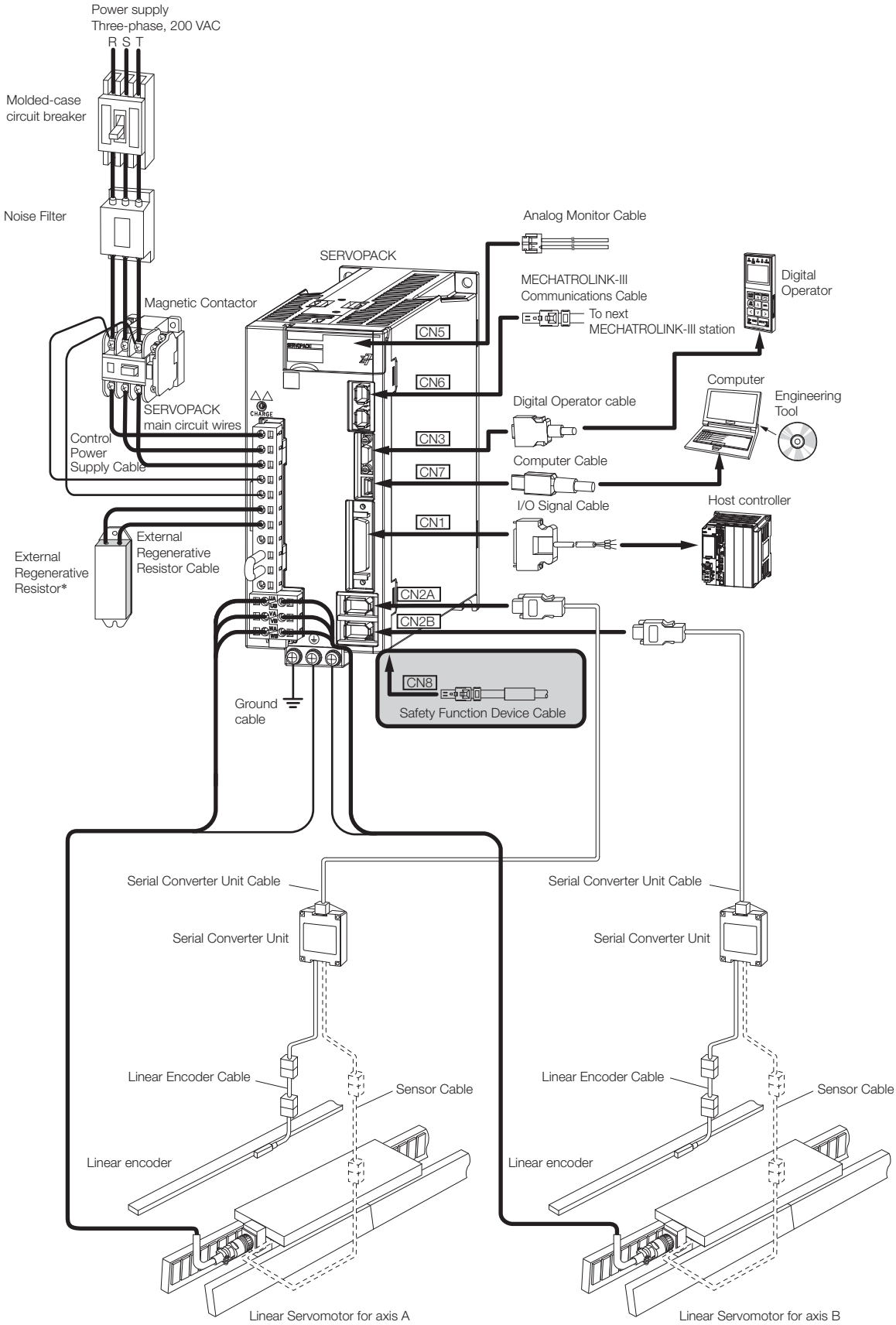

* External Regenerative Resistors are not provided by Yaskawa.

2.4.2 Σ-7C

• Rotary Servomotors

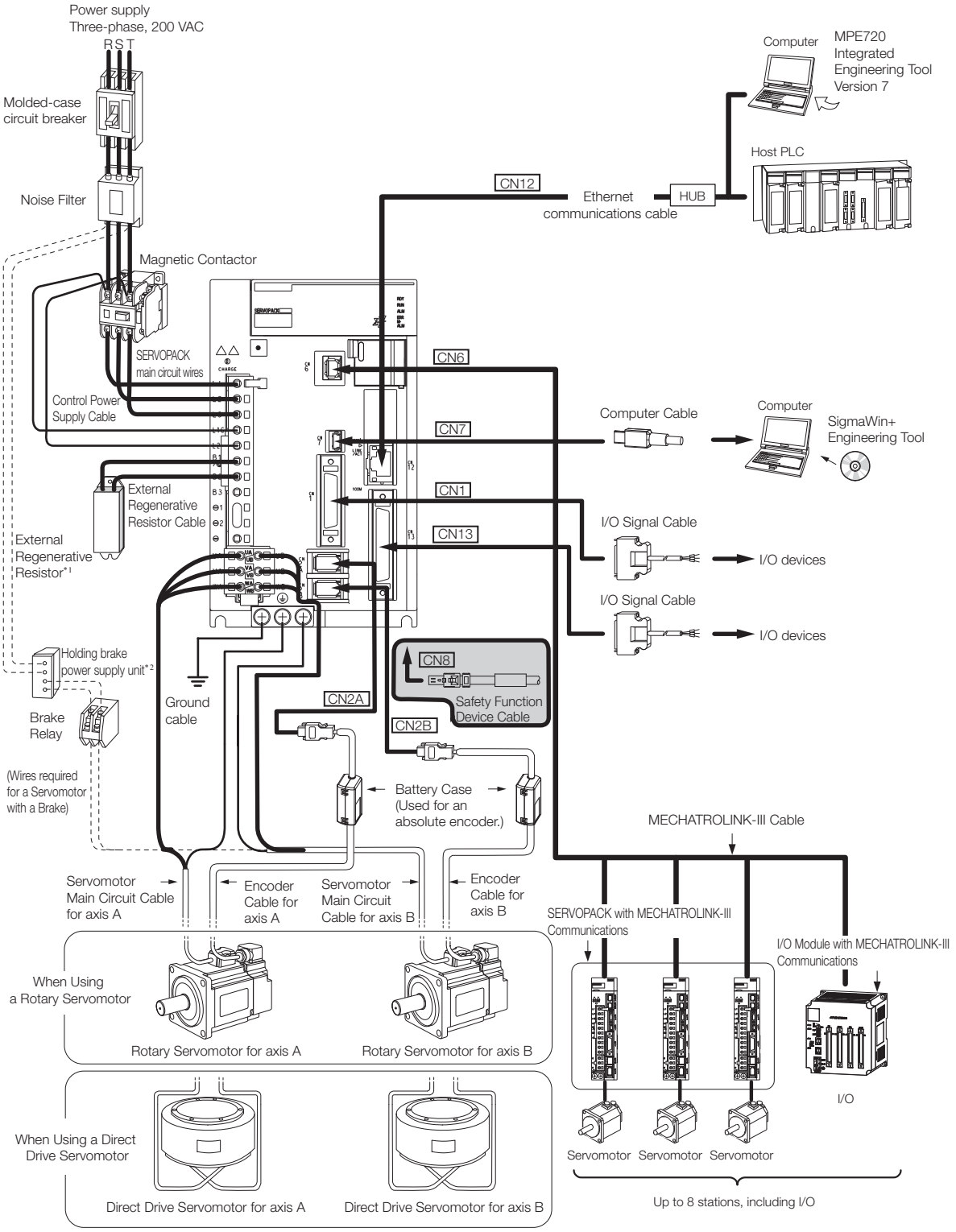

*1. External Regenerative Resistors are not provided by Yaskawa.

*2. The power supply for the holding brake is not provided by Yaskawa. Select a power supply based on the holding brake specifications.
If you use a 24-V brake, install a separate power supply for the 24-VDC power supply from other power supplies, such as the one for the I/O signals of the CN1 or CN13 connector. If the power supply is shared, the I/O signals may malfunction.

• Linear Servomotors

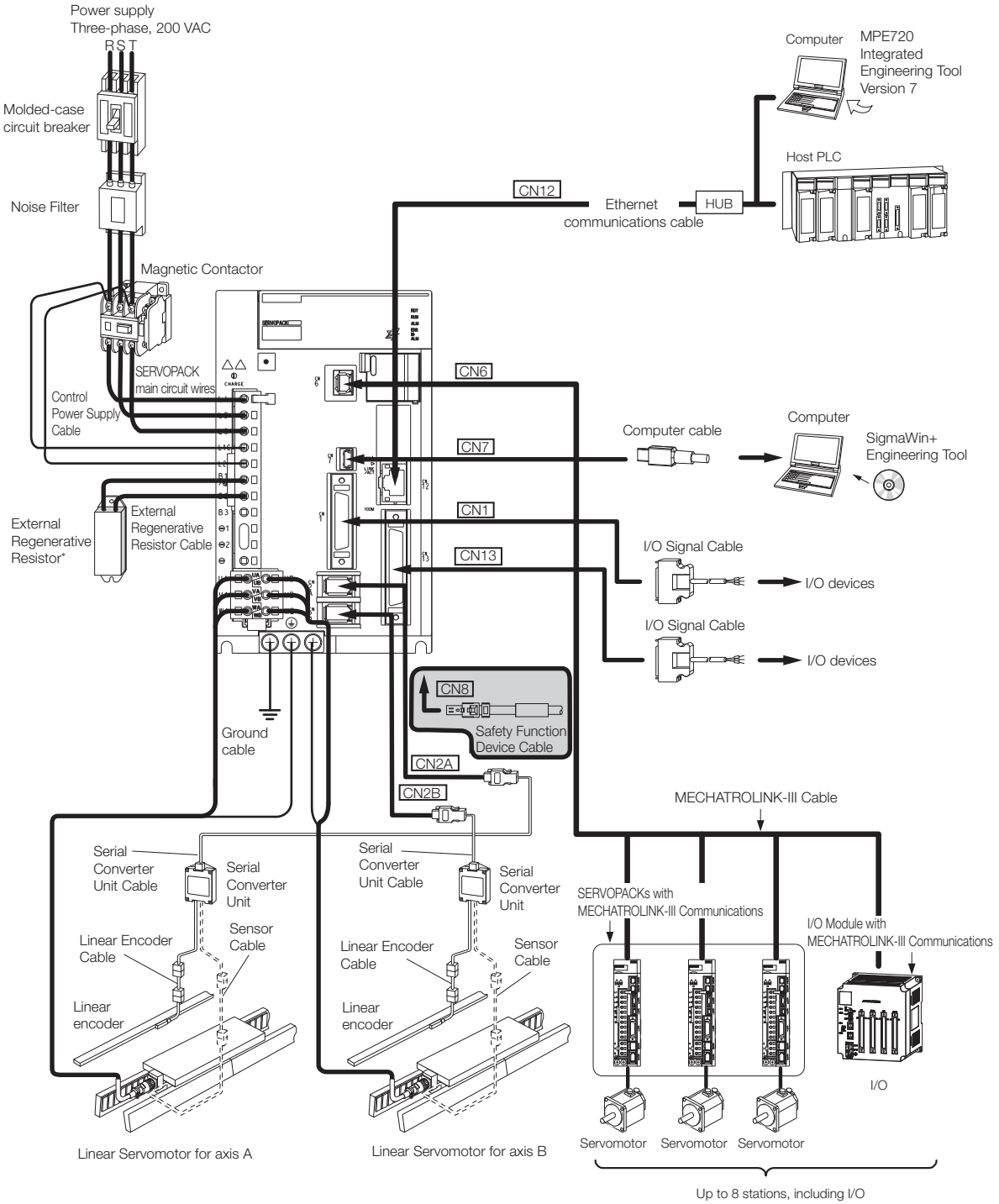

* External Regenerative Resistors are not provided by Yaskawa.

SERVOPACK Installation

3

This chapter provides the EMC installation conditions for SERVOPACKs that have the HWBB function.

3.1 EMC Installation Conditions 3-2

3.1.1 Σ-7W 3-2

3.1.2 Σ-7C 3-3

3.1 EMC Installation Conditions

This section gives the recommended installation conditions that were used for EMC certification testing.

The EMC installation conditions that are given here are the conditions that were used to pass testing criteria at Yaskawa. The EMC level may change under other conditions, such as the actual installation structure and wiring conditions. These Yaskawa products are designed to be built into equipment. Therefore, you must implement EMC measures and confirm compliance for the final equipment.

The applicable standards are EN 55011 group 1 class A, EN 61000-6-2, EN 61000-6-4, and EN 61800-3 (category C2, second environment).

Parts that are indicated by ▭ or ▭ are unique to the SERVOPACKs with the HWBB function.

3.1.1 Σ-7W

- Three-Phase, 200 VAC

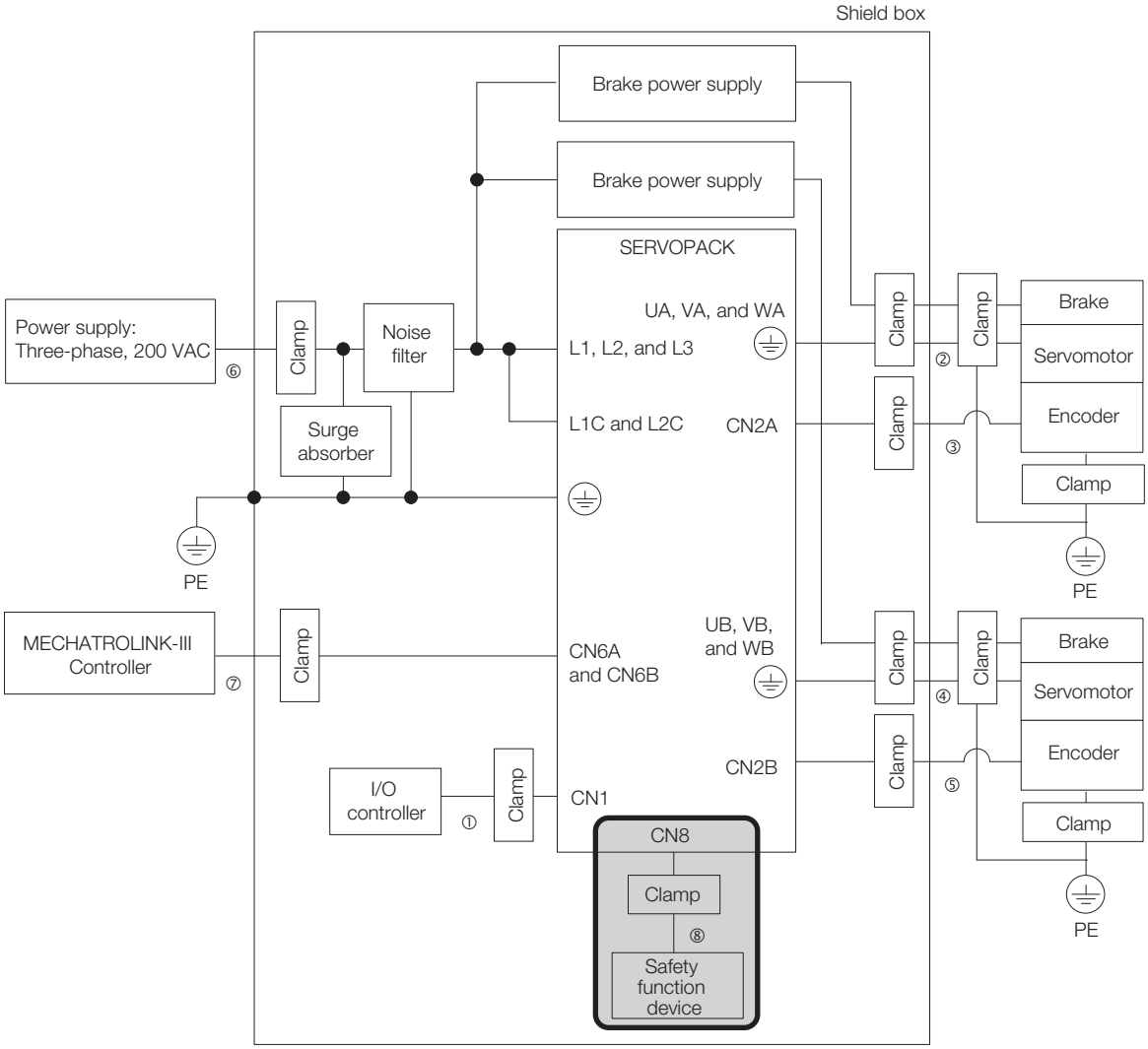

Symbol	Cable Name	Specification
①	I/O Signal Cable	Shielded cable
②	Motor Main Circuit Cable for axis A	Shielded cable
③	Encoder Cable for axis A	Shielded cable
④	Motor Main Circuit Cable for axis B	Shielded cable
⑤	Encoder Cable for axis B	Shielded cable
⑥	Main Circuit Power Cable	Shielded cable
⑦	MECHATROLINK-III Communications Cable	Shielded cable
⑧	Safety Function Device Cable	Shielded cable

3.1.2 Σ-7C

- Three-Phase, 200 VAC

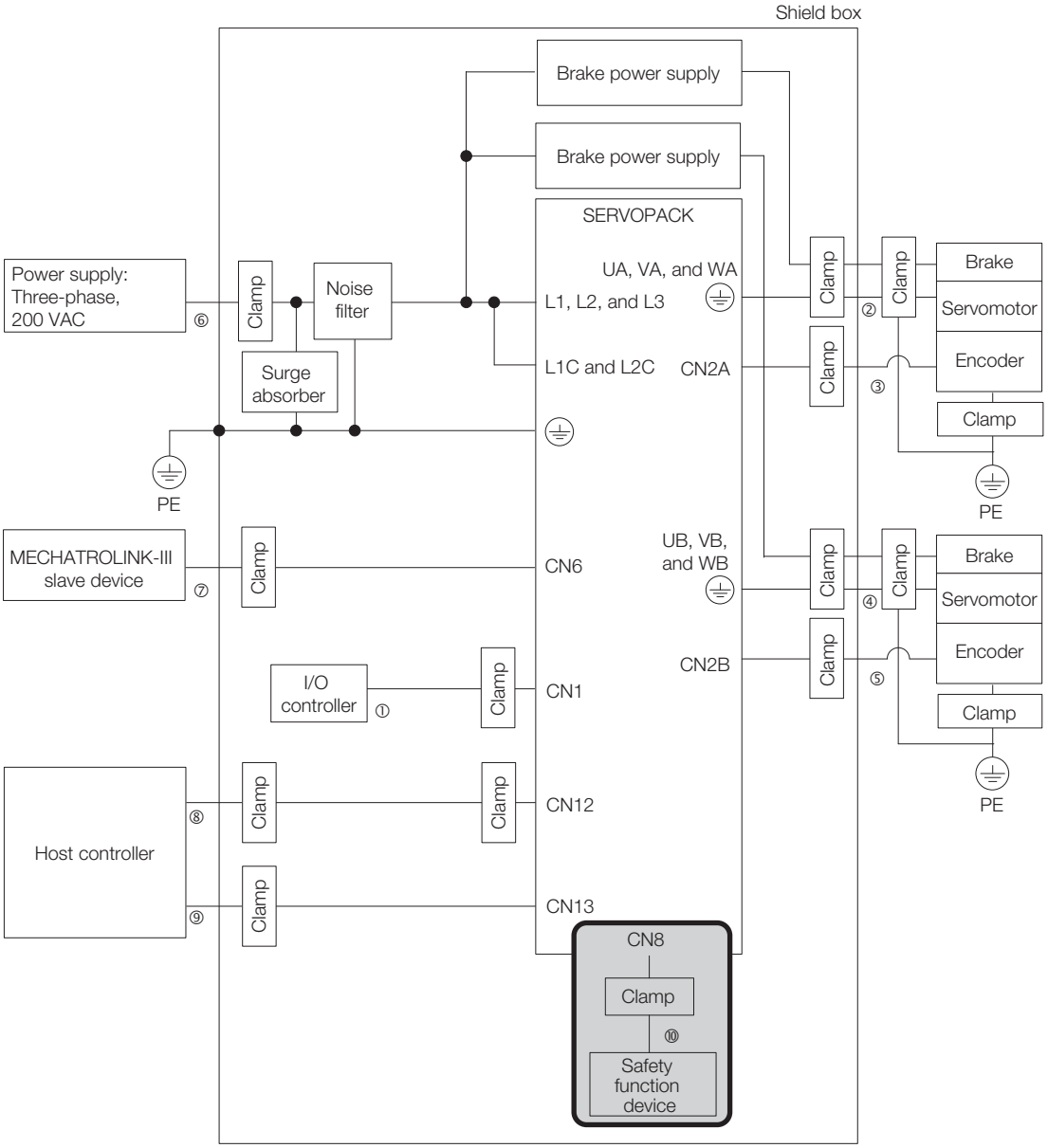

Code	Cable Name	Specification
①	I/O Signal Cable (CN1)	Shielded cable
②	Motor Main Circuit Cable for axis A	Shielded cable
③	Encoder Cable for axis A	Shielded cable
④	Motor Main Circuit Cable for axis B	Shielded cable
⑤	Encoder Cable for axis B	Shielded cable
⑥	Main Circuit Power Cable	Shielded cable
⑦	MECHATROLINK-III Communications Cable	Shielded cable
⑧	Ethernet Cable	Shielded cable
⑨	I/O Signal Cable (CN13)	Shielded cable
⑩	Safety Function Device Cable	Shielded cable

Wiring and Connecting SERVOPACKs

4

This chapter provides information on wiring and connecting SERVOPACKs to power supplies and peripheral devices.

4.1 Wiring and Connecting SERVOPACKs 4-2

4.2 Basic Wiring Diagrams 4-5

4.2.1 Σ-7W 4-5
4.2.2 Σ-7C 4-6

4.3 Connecting the HWBB Function Signal 4-8

4.3.1 Safety Function Connector (CN8) Pin Arrangement 4-8
4.3.2 I/O Circuits 4-8

4.1 Wiring and Connecting SERVOPACKs

DANGER

- **Do not change any wiring while power is being supplied.**
  There is a risk of electric shock or injury.

WARNING

- **Wiring and inspections must be performed only by qualified engineers.**
  There is a risk of electric shock or product failure.
- **Check all wiring and power supplies carefully.**
  Incorrect wiring or incorrect voltage application to the output circuits may cause short-circuit failures. If a short-circuit failure occurs as a result of any of these causes, the holding brake will not work. This could damage the machine or cause an accident that may result in death or injury.
- **Connect the AC and DC power supplies to the specified SERVOPACK terminals.**
  - Connect an AC power supply to the L1, L2, and L3 terminals and the L1C and L2C terminals on the SERVOPACK.
  - Connect a DC power supply to the B1/⊕ and ⊖2 terminals and the L1C and L2C terminals on the SERVOPACK.

  There is a risk of failure or fire.
- **If you use a SERVOPACK with the Dynamic Brake Hardware Option, connect an External Dynamic Brake Resistor that is suitable for the machine and equipment specifications to the specified terminals.**
  There is a risk of unexpected operation, machine damage, burning, or injury when an emergency stop is performed.

CAUTION

- **Wait for six minutes after turning OFF the power supply and then make sure that the CHARGE indicator is not lit before starting wiring or inspection work. Do not touch the power supply terminals while the CHARGE lamp is lit after turning OFF the power supply because high voltage may still remain in the SERVOPACK.**
  There is a risk of electric shock.
- **Observe the precautions and instructions for wiring and trial operation precisely as described in this document.**
  Failures caused by incorrect wiring or incorrect voltage application in the brake circuit may cause the SERVOPACK to fail, damage the equipment, or cause an accident resulting in death or injury.
- **Check the wiring to be sure it has been performed correctly.**
  Connectors and pin layouts are sometimes different for different models. Always confirm the pin layouts in technical documents for your model before operation.
  There is a risk of failure or malfunction.
- **Connect wires to power supply terminals and motor connection terminals securely with the specified methods and tightening torque.**
  Insufficient tightening may cause wires and terminal blocks to generate heat due to faulty contact, possibly resulting in fire.
- **Use shielded twisted-pair cables or screened unshielded multi-twisted-pair cables for I/O Signal Cables and Encoder Cables.**
- **Observe the following precautions when wiring the SERVOPACK's main circuit terminals.**
  - Turn ON the power supply to the SERVOPACK only after all wiring, including the main circuit terminals, has been completed.
  - If a connector is used for the main circuit terminals, remove the main circuit connector from the SERVOPACK before you wire it.
  - Insert only one wire per insertion hole in the main circuit terminals.
  - When you insert a wire, make sure that the conductor wire (e.g., whiskers) does not come into contact with adjacent wires.
- **Install molded-case circuit breakers and other safety measures to provide protection against short circuits in external wiring.**
  There is a risk of fire or failure.

⚠ CAUTION

- **In places with poor power supply conditions, ensure that the input power is supplied within the specified voltage range.**
  There is a risk of equipment damage.
- **Provide sufficient shielding when using the SERVOPACK in the following locations.**
  - Locations that are subject to noise, such as from static electricity
  - Locations that are subject to strong electromagnetic or magnetic fields
  - Locations that are subject to radiation
  - Locations that are near power lines

  There is a risk of equipment damage.
- **Configure the circuits to turn ON the control power supply to the SERVOPACK before the 24-V I/O power supply.**
  If the control power supply to the SERVOPACK is turned ON after the external power supply, e.g., the 24-V I/O power supply, the outputs from the SERVOPACK may momentarily turn ON when the power supply to the SERVOPACK turns ON. This can result in unexpected operation that may cause injury or device damage.
- **Provide emergency stop circuits, interlock circuits, limit circuits, and any other required safety measures in control circuits outside of the SERVOPACK.**
  There is a risk of injury or device damage.
- **If you use MECHATROLINK I/O Modules, use the establishment of MECHATROLINK communications as an interlock output condition.**
  There is a risk of device damage.
- **Select the I/O signal wires for external wiring to connect the SERVOPACK to external devices based on the following criteria:**
  - Mechanical strength
  - Noise interference
  - Wiring distance
  - Signal voltage
- **Separate the I/O signal cables for control circuits from the power cables both inside and outside the control panel to reduce the influence of noise from the power cables.**
  If the I/O signal lines and power lines are not separated properly, malfunction may occur.

Example of Separated Cables

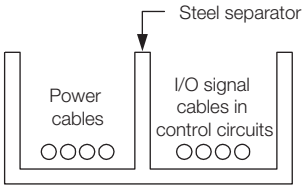

NOTICE

- **Whenever possible, use the Cables specified by Yaskawa.**
  If you use any other cables, confirm the rated current and application environment of your model and use the wiring materials specified by Yaskawa or equivalent materials.
- **Securely tighten cable connector screws and lock mechanisms.**
  Insufficient tightening may result in cable connectors falling off during operation.
- **Do not bundle power lines (e.g., the Main Circuit Cable) and low-current lines (e.g., the I/O Signal Cables or Encoder Cables) together or run them through the same duct. If you do not place power lines and low-current lines in separate ducts, separate them by at least 30 cm.**
  If the cables are too close to each other, malfunctions may occur due to noise affecting the low-current lines.
- **Install a battery at either the host controller or on the Encoder Cable.**
  If you install batteries both at the host controller and on the Encoder Cable at the same time, you will create a loop circuit between the batteries, resulting in a risk of damage or burning.
- **When connecting a battery, connect the polarity correctly.**
  There is a risk of battery rupture or encoder failure.

Important

- Use a molded-case circuit breaker (1QF) or fuse to protect the main circuit. The SERVOPACK connects directly to a commercial power supply; it is not isolated through a transformer or other device. Always use a molded-case circuit breaker (1QF) or fuse to protect the servo system from accidents involving different power system voltages or other accidents.
- Install an earth leakage breaker. The SERVOPACK does not have a built-in ground fault protective circuit. To configure a safer system, install a ground fault detector against overloads and short-circuiting, or install a ground fault detector combined with a molded-case circuit breaker.
- Do not turn the power supply ON and OFF more than necessary.
  - Do not use the SERVOPACK for applications that require the power supply to turn ON and OFF frequently. Such applications will cause elements in the SERVOPACK to deteriorate.
  - After you have started actual operation, allow at least one hour between turning the power supply ON and OFF (as a guideline).

To ensure safe, stable application of the servo system, observe the following precautions when wiring.

- Use the cables specified by Yaskawa. Design and arrange the system so that each cable is as short as possible.
  Refer to the following manual for information on the specified cables.
  Σ-7-Series Peripheral Device Selection Manual (Manual No.: SIEP S800001 32)
- The signal cable conductors are as thin as 0.2 mm^2 or 0.3 mm^2. Do not subject them to excessive bending stress or tension.

4.2 Basic Wiring Diagrams

This section provide the basic wiring diagrams. Parts that are indicated by ▭ are unique to the SERVOPACKs with the HWBB function.

4.2.1 Σ-7W

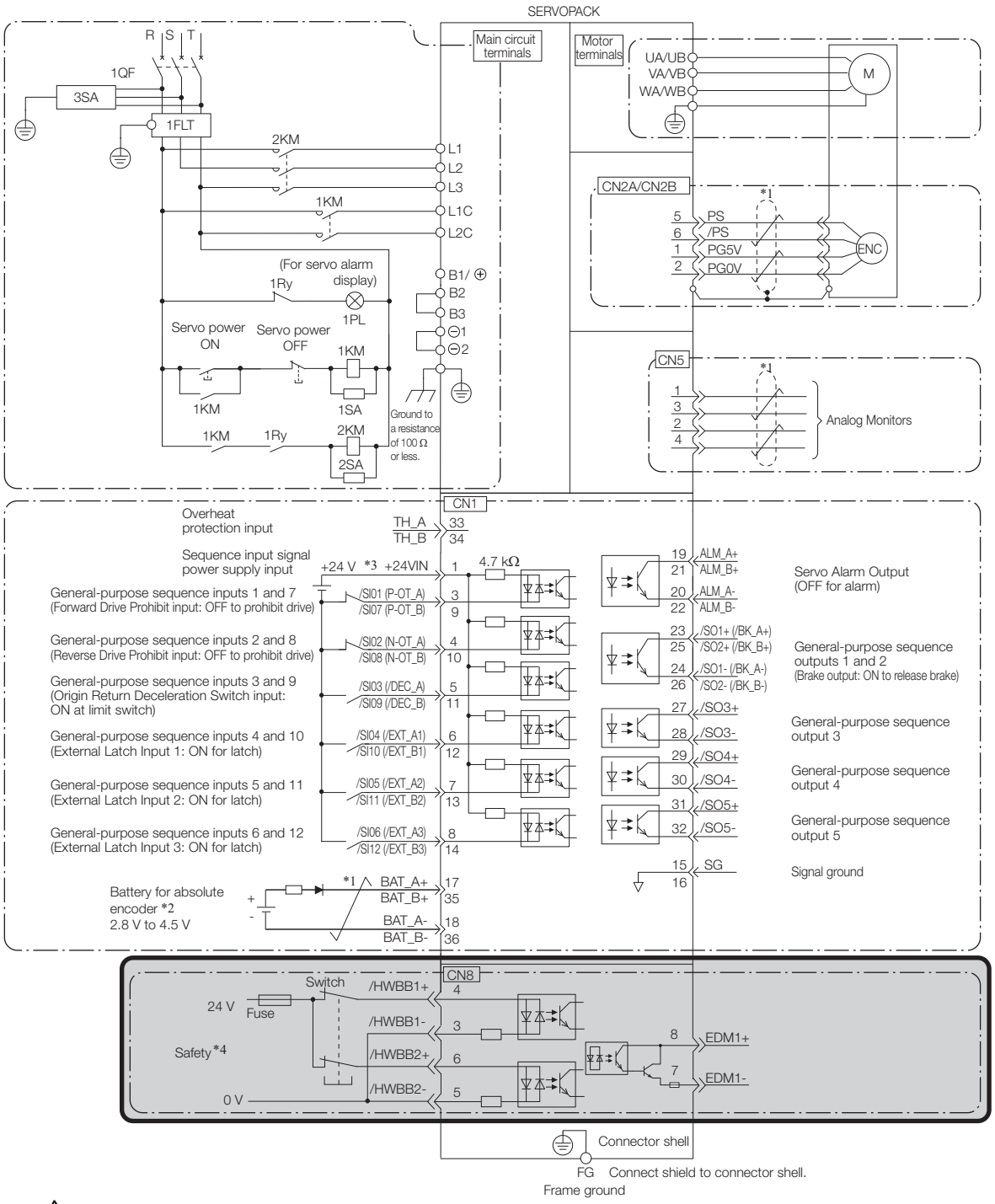

*1. represents twisted-pair wires.
*2. Connect these when using an absolute encoder. If the Encoder Cable with a Battery Case is connected, do not connect a backup battery.
*3. The 24-VDC power supply is not provided by Yaskawa. Use a 24-VDC power supply with double insulation or reinforced insulation.

*4. Refer to the following chapter for details.
☞ *Chapter 5 Safety Functions*

If you do not use the safety function, insert the Safety Jumper Connector (provided as an accessory) into CN8 when you use the SERVOPACK.

Note: 1. You can use parameter settings to change some of the I/O signal allocations. Refer to the following manual for details.
📖 Σ-7-Series Σ-7W SERVOPACK with MECHATROLINK-III Communications References Product Manual (Manual No.: SIEP S800001 29)

2. If you use a 24-V brake, install a separate power supply for the 24-VDC power supply from other power supplies, such as the one for the I/O signals of the CN1 connector. If the power supply is shared, the I/O signals may malfunction.

3. Default settings are given in parentheses.

4.2.2 Σ-7C

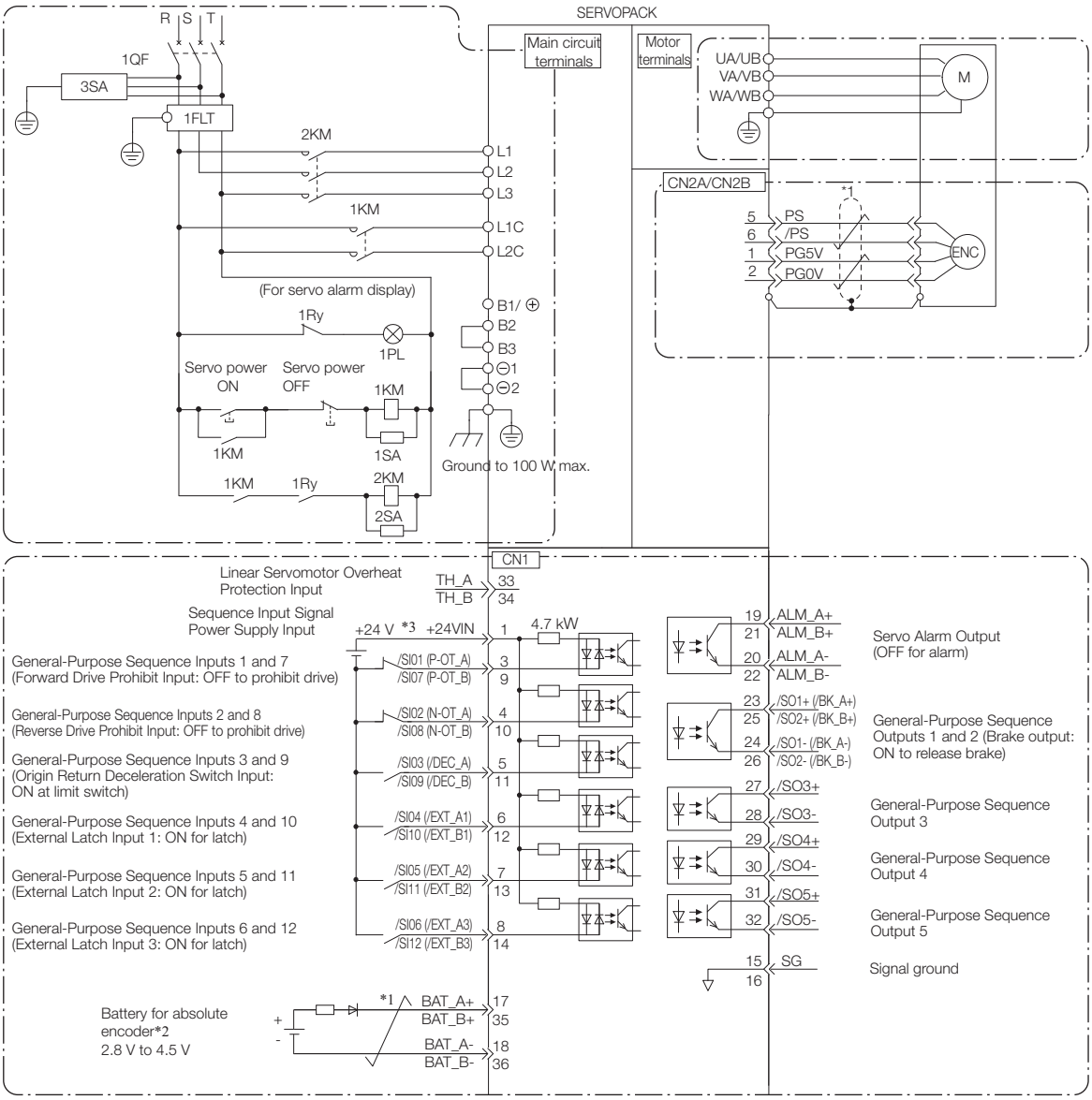

(Continued on next page.)

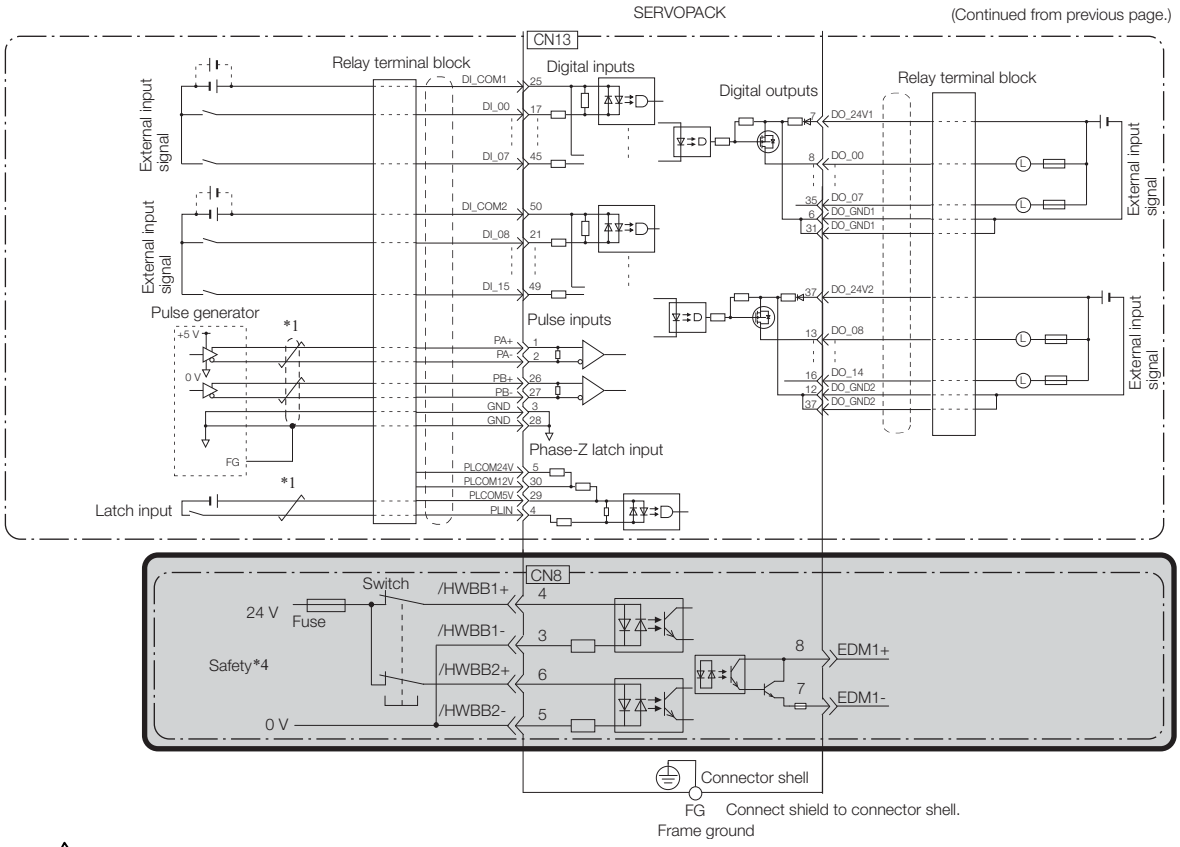

*1. represents twisted-pair wires.

*2. Connect these when using an absolute encoder. If the Encoder Cable with a Battery Case is connected, do not connect a backup battery.

*3. The 24-VDC power supply is not provided by Yaskawa. Use a 24-VDC power supply with double insulation or reinforced insulation.

*4. Refer to the following section for details.

Chapter 5 Safety Functions

If you do not use the safety function, insert the Safety Jumper Connector (provided as an accessory) into CN8 when you use the SERVOPACK.

Note: 1. You can use parameter settings to change some of the I/O signal allocations. Refer to the following manual for details.

Σ-7-Series Σ-7C SERVOPACK Product Manual (Manual No.: SIEP S800002 04)

2. If you use a 24-V brake, install a separate power supply for the 24-VDC power supply from other power supplies, such as the one for the I/O signals of the CN1 connector. If the power supply is shared, the I/O signals may malfunction.

3. Default settings are given in parentheses.

4.3 Connecting the HWBB Function Signal

This section describes the wiring that is required to use the HWBB function.
Refer to the following chapter for details on the HWBB function.
☞ *Chapter 5 Safety Functions*

4.3.1 Safety Function Connector (CN8) Pin Arrangement

Pin No.	Signal	Name	Function
1*	–	–	
2*	–		
3	/HWBB1-	Hard Wire Base Block Input 1	For a hard wire base block input. The base block (motor power turned OFF) is in effect when the signal is OFF.
4	/HWBB1+		
5	/HWBB2-	Hard Wire Base Block Input 2	
6	/HWBB2+		
7	EDM1-	External Device Monitor Output	Turns ON when the /HWBB1 and the /HWBB2 signals are input and the SERVOPACK enters a base block state.
8	EDM1+		

* Do not use these pins because they are connected to internal circuits.

4.3.2 I/O Circuits

Important

For HWBB function signal connections, the input signal is the 0-V common and the output signal is a source output. This is opposite to other signals described in this manual. To avoid confusion, the ON and OFF status of signals for the HWBB function are defined as follows:

ON: The state in which the relay contacts are closed or the transistor is ON and current flows into the signal line.

OFF: The state in which the relay contacts are open or the transistor is OFF and no current flows into the signal line.

HWBB Input Circuit

Use a 0-V common to connect the HWBB function signals. You must connect redundant input signals.

Input Signal Connection Example

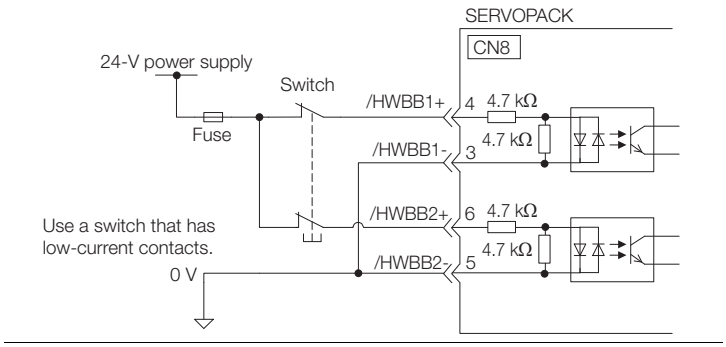

◆ Input (HWBB) Signal Specifications

Type	Signal	Connector Pin No.	Status	Meaning
Inputs	/HWBB1	CN8-4 CN8-3	ON (closed)	Does not activate the HWBB function (normal operation).
			OFF (open)	Activates the HWBB function (motor current shut-OFF request).
	/HWBB2	CN8-6 CN8-5	ON (closed)	Does not activate the HWBB function (normal operation).
			OFF (open)	Activates the HWBB function (motor current shut-OFF request).

The input (HWBB) signals have the following electrical characteristics.

Item	Characteristics	Remarks
Internal Impedance	4.7 kΩ	–
Operating Voltage Range	+24 V ±20%	–
Maximum Delay Time	8 ms	Time from /HWBB1 and /HWBB2 signals turning OFF until HWBB function is activated

Diagnostic Output Circuits

The EDM1 output signal uses a source circuit. The following figure shows a connection example.

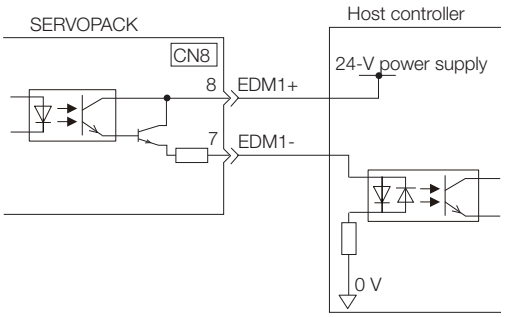

◆ EDM1 Output Signal Specifications

Type	Signal	Pin No.	Output Status	Meaning
Output	EDM1	CN8-8 CN8-7	ON	Both the /HWBB1 and /HWBB2 signals are operating normally.
			OFF	The /HWBB1 signal, the /HWBB2 signal, or both are not operating.

The electrical characteristics of the EDM1 signal are as follows:

Item	Characteristics	Remarks
Maximum Allowable Voltage	30 VDC	–
Maximum Allowable Current	50 mA DC	–
Maximum ON Voltage Drop	1.0 V	Voltage between EDM1+ and EDM1- when current is 50 mA
Maximum Delay Time	8 ms	Time from a change in /HWBB1 or /HWBB2 until a change in EDM1

Safety Functions

5

This chapter provides details on the HWBB function as a safety function of the SERVOPACKs.

5.1 Introduction to the HWBB Function 5-2

5.1.1 What Is the HWBB Function? 5-2
5.1.2 Precautions for the HWBB Function 5-2

5.2 HWBB Function 5-3

5.2.1 Risk Assessment 5-4
5.2.2 HWBB State 5-4
5.2.3 Resetting the HWBB State 5-7
5.2.4 Related Commands 5-8
5.2.5 Detecting Errors in HWBB Signal 5-9
5.2.6 HWBB Input Signal Specifications 5-9
5.2.7 HWBB Input Signal Waveform Trace 5-9
5.2.8 Operation without a Host Controller 5-10
5.2.9 /S-RDY (Servo Ready Output) Signal 5-10
5.2.10 /BK (Brake Output) Signal 5-11
5.2.11 Stopping Methods 5-11
5.2.12 ALM (Servo Alarm) Signal 5-11

5.3 EDM1 (External Device Monitor) 5-12

5.3.1 EDM1 Output Signal Specifications 5-12

5.4 HWBB Function Application Example 5-13

5.4.1 Connection Example 5-13
5.4.2 Failure Detection Method 5-13
5.4.3 Procedure 5-14

5.5 Validating the HWBB Function 5-15

5.6 Connecting the Safety Function Device . . 5-16

5.1 Introduction to the HWBB Function

5.1.1 What Is the HWBB Function?

An HWBB function is built into the SERVOPACK to reduce the risks associated with using the machine by protecting workers from the hazards of moving machine parts and otherwise increasing the safety of machine operation. When working in hazardous areas inside guards is necessary, such as for machine maintenance, the HWBB function can be used to avoid hazardous moving machine parts.

Refer to the following section for information on the HWBB function and safety parameters.

☞ *Compliance with UL Standards, EU Directives, and Other Safety Standards* on page xxix

Important

Products that display the TÜV mark on the nameplate have met the safety standards.

5.1.2 Precautions for the HWBB Function

⚠ WARNING

- To confirm that the HWBB function satisfies the safety requirements of the system, you must conduct a risk assessment of the system.
  Incorrect use of the safety function may cause injury.
- The Servomotor will move if there is an external force (e.g., gravity on a vertical axis) even when the HWBB function is operating. Use a separate means, such as a mechanical brake, that satisfies the safety requirements.
  Incorrect use of the safety function may cause injury.
- While the HWBB function is operating, the motor may move within an electric angle of 180° or less as a result of a SERVOPACK failure. Use the HWBB function for an application only after confirming that movement of the motor will not result in a hazardous condition.
  Incorrect use of the safety function may cause injury.
- The dynamic brake and the brake signal are not safety-related elements. You must design the system so that SERVOPACK failures will not cause a hazardous condition while the HWBB function is operating.
  Incorrect use of the safety function may cause injury.
- Connect devices that satisfy the safety standards for the signals for an HWBB function.
  Incorrect use of the safety function may cause injury.
- The HWBB function does not shut OFF the power to the SERVOPACK or electrically isolate it. Implement measures to shut OFF the power supply to the SERVOPACK before you perform maintenance on it.
  There is a risk of electric shock.

5.2 HWBB Function

The HWBB function uses a hardwired circuit to shut off the current to the motors.
The drive signals to the Power Module that controls the motor current are controlled by the circuits that are independently connected to the two input signal channels to turn OFF the Power Module and shut OFF the motor current.

The current to the motors is simultaneously shut off for both axes. You cannot shut off the current to the motor for just one axis.

Important

1. You cannot execute the following functions while the HWBB function is active. Make sure that the HWBB function is not active before you execute these functions.
   - Polarity detection
   - Jogging
   - Program jogging
   - Origin searches
   - Moment of inertia estimation
   - Automatic adjustment
   - Speed ripple compensation
   - EasyFFT
2. For HWBB function signal connections, the input signal is the 0-V common and the output signal is a source output. This is opposite to other signals described in this manual. To avoid confusion, the ON and OFF status of signals for the HWBB function are defined as follows:
   ON: The state in which the relay contacts are closed or the transistor is ON and current flows into the signal line.
   OFF: The state in which the relay contacts are open or the transistor is OFF and no current flows into the signal line.

The input signal uses the 0-V common. The following figure shows a connection example.

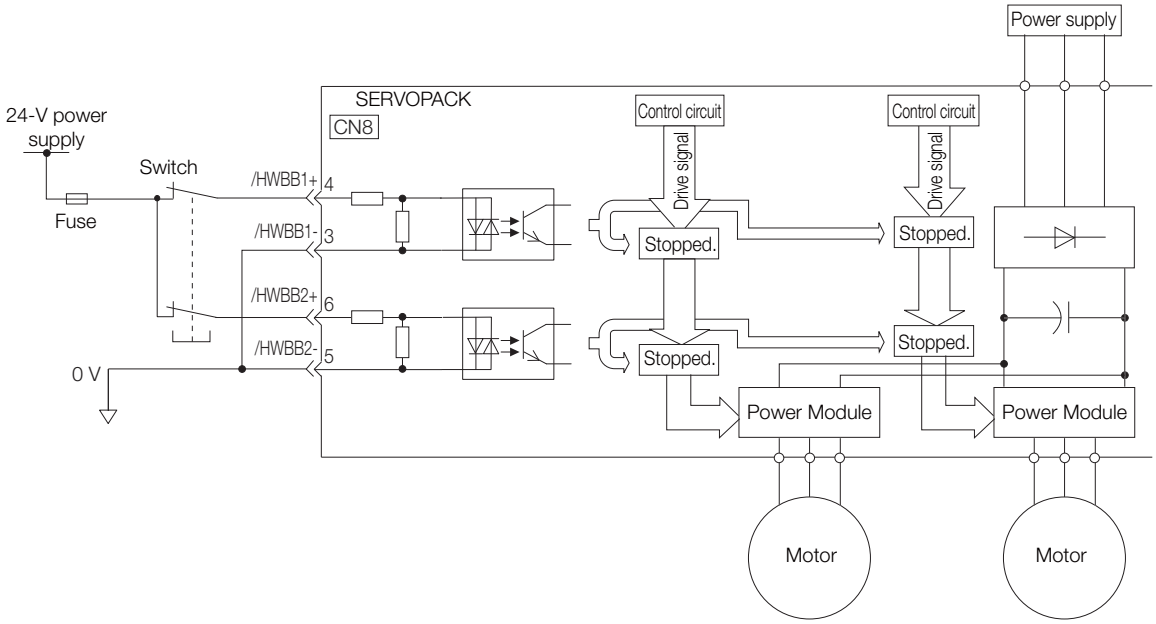

5.2.1 Risk Assessment

When using the HWBB function, you must perform a risk assessment of the servo system in advance to confirm that the safety level of the standards is satisfied. Refer to the following section for details on the standards.

☞ *Compliance with UL Standards, EU Directives, and Other Safety Standards* on page xxix

Note: To meet performance level e (PLe) in EN ISO 13849-1 and SIL3 in IEC 61508, the EDM1 signal must be monitored by the host controller. If the EDM1 signal is not monitored by the host controller, the levels will be safety performance level c (PLc) and SIL1.

The following hazards exist even when the HWBB function is operating. These hazards must be included in the risk assessment.

- The Servomotor will move if an external force is applied to it (for example, gravity on a vertical axis). Implement measures to hold the Servomotor, such as installing a separate mechanical brake.
- If a failure occurs such as a Power Module failure, the Servomotor may move within an electric angle of 180°. Ensure safety even if the Servomotor moves.
  The rotational angle or travel distance depends on the type of Servomotor as follows:
  - Rotary Servomotor: 1/6 rotation max. (rotational angle calculated at the motor shaft)
  - Direct Drive Servomotor: 1/20 rotation max. (rotational angle calculated at the motor shaft)
  - Linear Servomotor: 50 mm max.
- The HWBB function does not shut OFF the power to the SERVOPACK or electrically isolate it. Implement measures to shut OFF the power supply to the SERVOPACK before you perform maintenance on it.
- The HWBB function of a Σ-7W/Σ-7C SERVOPACK shuts off the current to the motors for both axes at the same time. You cannot shut off the current to the motor for just one axis. Build the system so that a hazardous condition will not result if the current to the motors for both axes is shut off.

5.2.2 HWBB State

> **Important**
> The following examples use the Σ-7W SERVOPACK with MECHATROLINK-III commands. If you use a Σ-7C SERVOPACK, you will need to use Controller Section commands instead of MECHATROLINK-III commands.

The HWBB state is when the /HWBB1 or /HWBB2 signal is OFF, the HWBB function is active, and the current to the motor is turned OFF with a hardwired circuit.

If the /HWBB1 or /HWBB2 signal turns OFF and the HWBB function is activated, the SERVOPACK will be in the following status.

- When HWBB Function Operates after Servo OFF (Power Not Supplied to Motor)

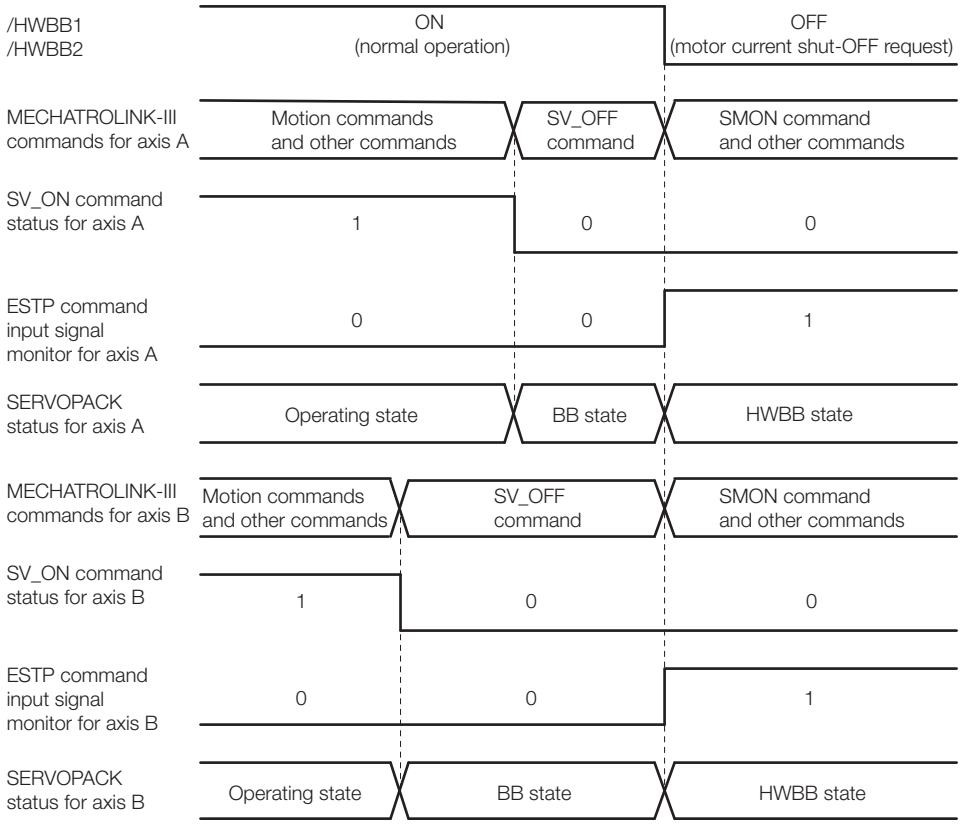

- When HWBB Function Operates While Power Is Supplied to Servomotor

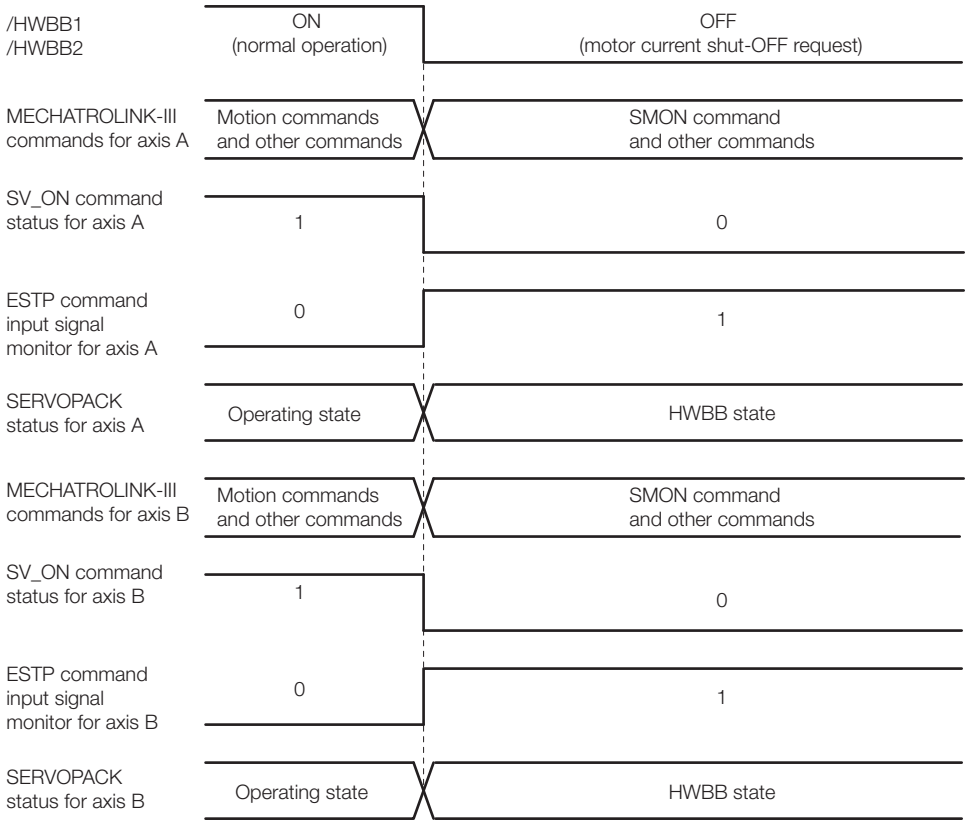

5.2.3 Resetting the HWBB State

> **Important**
> The following examples use the Σ-7W SERVOPACK with MECHATROLINK-III commands. If you use a Σ-7C SERVOPACK, you will need to use Controller Section commands instead of MECHATROLINK-III commands.

Normally, after the SV_OFF (Servo OFF: 32 hex) command is received and power is no longer supplied to the Servomotor, the /HWBB1 and /HWBB2 signals will turn OFF and the SERVOPACK will enter the HWBB state. If you turn ON the /HWBB1 and /HWBB2 signals in this state, the SERVOPACK will enter a base block (BB) state and will be ready to acknowledge the SV_ON (Servo ON: 31 hex) command.

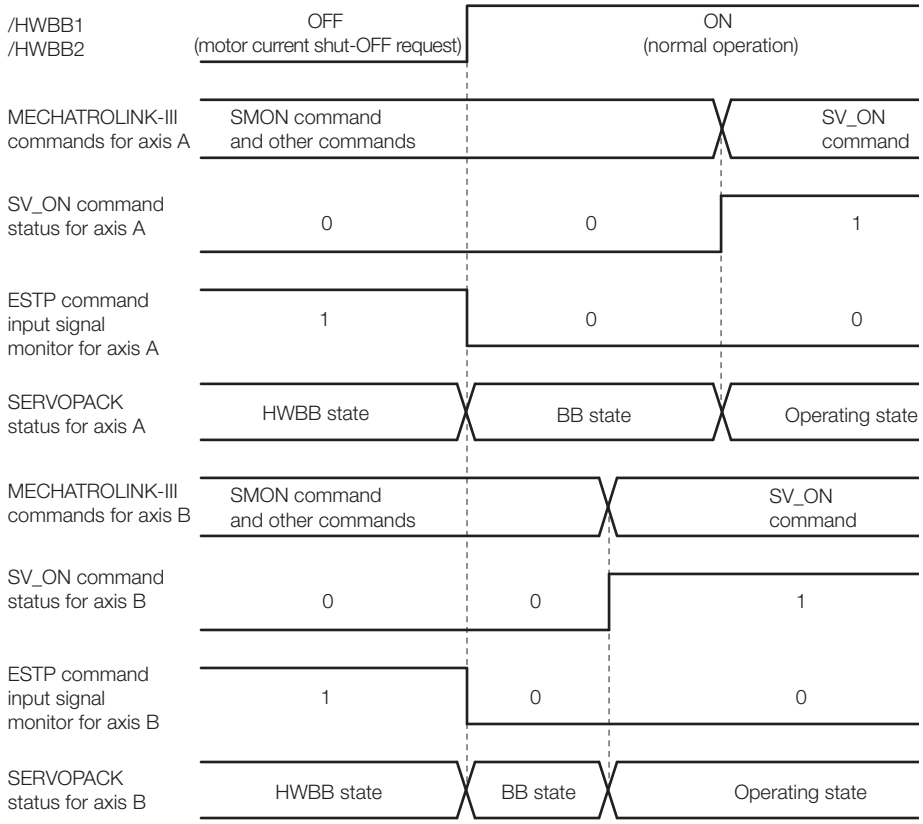

If the /HWBB1 and /HWBB2 signals are OFF and the SV_ON (Servo ON: 31 hex) command is received, the HWBB state will be maintained even after the /HWBB1 and /HWBB2 signals are turned ON. Send the SV_OFF (Servo OFF: 32 hex) command for axis A and axis B to place the SERVOPACK in the BB state and then send the SV_ON (Servo ON: 31 hex) command.

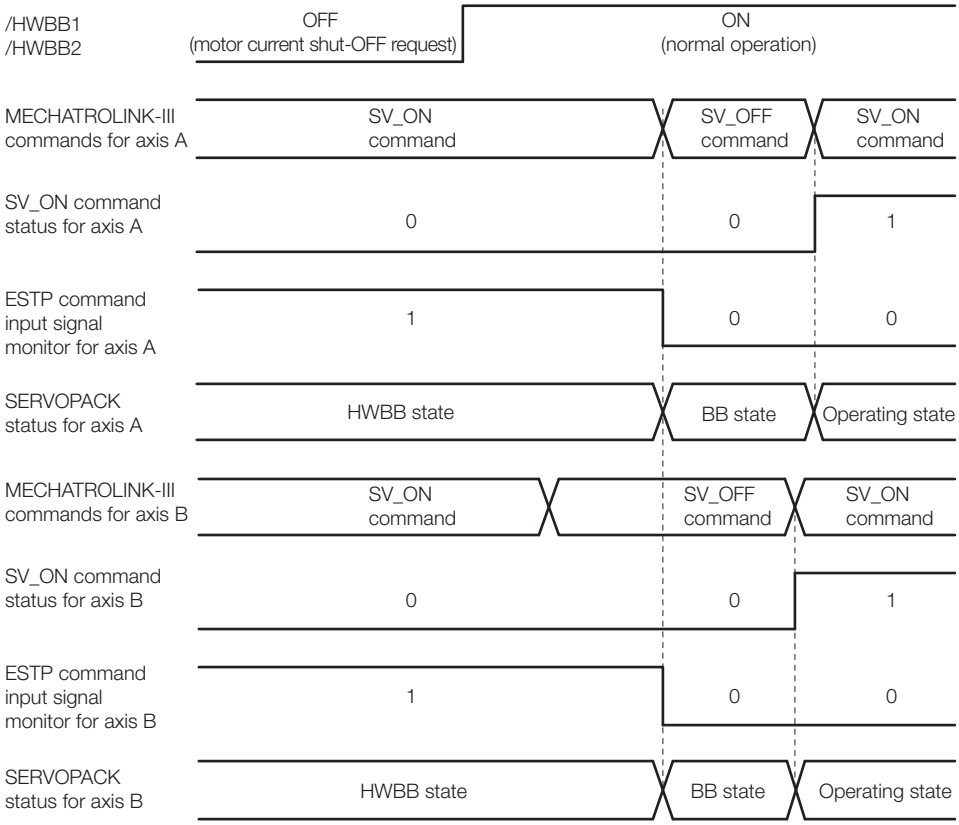

Note: If the SERVOPACK is placed in the BB state while the main circuit power supply is OFF, the HWBB state will be maintained until the SV_OFF (Servo OFF: 32 hex) command is received.

5.2.4 Related Commands

> **Important**
> The following example uses the Σ-7W SERVOPACK with MECHATROLINK-III commands. If you use a Σ-7C SERVOPACK, you will need to use Controller Section commands instead of MECHATROLINK-III commands.

If the /HWBB1 or /HWBB2 signal turns OFF and the HWBB function operates, the ESTP bit in the servo command input signal monitor (SVCMD_IO) will change to 1. The host controller can monitor this bit to determine the status.
If the state changes to the HWBB state during the execution of the next motion command, a command warning occurs. If a warning occurs, clear the alarm to return to normal operating status. After stopping or canceling the motion command, using the sequence of commands to return to the HWBB state is recommended.

Applicable Motion Commands
SV_ON (Servo ON)
INTERPORATE (Interpolating)
POSING (Positioning)
FEED (Constant Speed Feed)
EX_FEED (Constant Speed Feed with Position Detection)
LATCH (Interpolating with Position Detection)
EX_POSING (External Input Positioning)
ZRET (Origin Return)

5.2.5 Detecting Errors in HWBB Signal

If only the /HWBB1 or the /HWBB2 signal is input, an A.Eb1 alarm (Safety Function Signal Input Timing Error) will occur unless the other signal is input within 10 seconds. This makes it possible to detect failures, such as disconnection of an HWBB signal.

⚠ CAUTION

- The A.Eb1 alarm (Safety Function Signal Input Timing Error) is not a safety-related element. Keep this in mind when you design the system.

5.2.6 HWBB Input Signal Specifications

If an HWBB function is requested by turning OFF the two HWBB input signal channels (/HWBB1 and /HWBB2), the power supply to the Servomotors for axis A and axis B will be turned OFF within 8 ms.

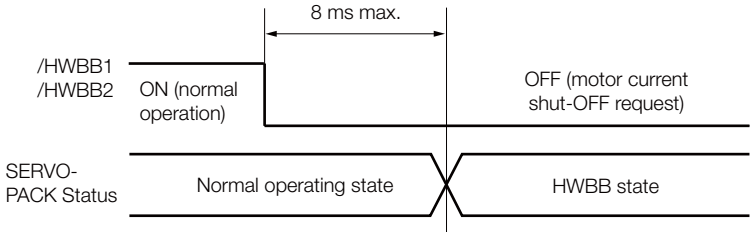

Note: 1. The OFF status is not recognized if the OFF interval of the /HWBB1 or /HWBB2 signal is 0.5 ms or shorter.
2. You can check the status of the input signals by using monitor displays. Refer to the following manual for your SERVOPACK for details.
Σ-7-Series Σ-7W SERVOPACK with MECHATROLINK-III Communications References Product Manual (Manual No.: SIEP S800001 29)
Σ-7-Series Σ-7C SERVOPACK Product Manual (Manual No.: SIEP S800002 04)

5.2.7 HWBB Input Signal Waveform Trace

You can trace the following input signals with the I/O trace function of the SigmaWin+.

- /HWBB1 (Hard Wire Base Block Input 1) signal
- /HWBB2 (Hard Wire Base Block Input 2) signal

Refer to the following manual for details on the I/O trace function.
AC Servo Drives Engineering Tool SigmaWin+ Online Manual Σ-7 Component (Manual No.: SIEP S800001 48)

5.2.8 Operation without a Host Controller

The HWBB function will operate even for operation without a host controller.

However, if the HWBB function operates during execution of the following functions, leave the execution mode for the function and then enter it again to restart operation. Do this for both axis A and axis B. Operation will not be restarted simply by turning OFF the /HWBB1 and /HWBB2 signals.

Applicable Functions	Resetting the HWBB State
• Jogging • Origin search • Program jogging • Automatic adjustment without host reference • EasyFFT • Adjustment of motor current detection signal offset	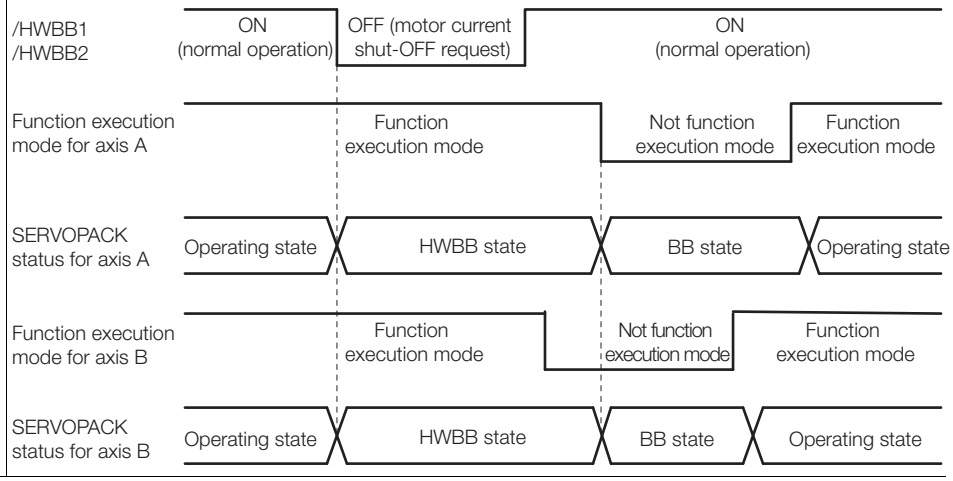

5.2.9 /S-RDY (Servo Ready Output) Signal

> **Important**
> The following example uses the Σ-7W SERVOPACK with MECHATROLINK-III commands. If you use a Σ-7C SERVOPACK, you will need to use Controller Section commands instead of MECHATROLINK-III commands.

The SV_ON (Servo ON: 31 hex) command will not be acknowledged in the HWBB state. Therefore, the Servo Ready Output Signal will turn OFF.
The Servo Ready Output Signal will turn ON if both the /HWBB1 and /HWBB2 signals are ON and the servo is turned OFF (BB state).

An example is provided below for when the main circuit power supply is ON and the SENS_ON (Turn Sensor ON) command is input when there is no servo alarm. (An absolute encoder is used in this example.) The same operation is performed for axis A and axis B.

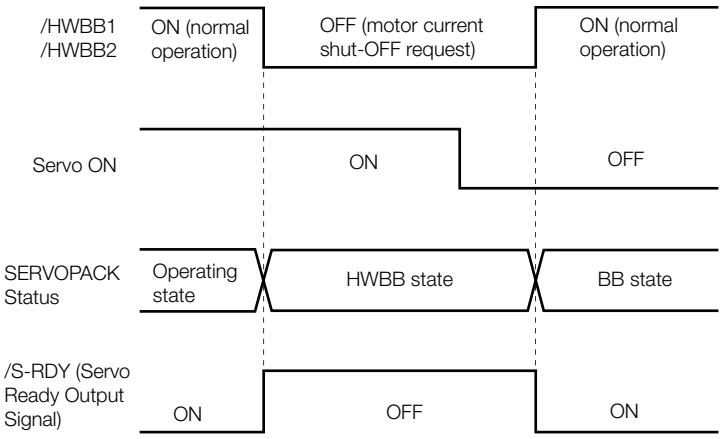

5.2.10 /BK (Brake Output) Signal

If the HWBB function operates when the /HWBB1 or /HWBB2 signal is OFF, the /BK (Brake) signal will turn OFF. At that time, the setting in Pn506 (Brake Reference - Servo OFF Delay Time) will be disabled. Therefore, the Servomotor may be moved by external force until the actual brake becomes effective after the /BK signal turns OFF.

⚠ CAUTION

- The brake signal is not a safety-related element. You must design the system so that a hazardous condition does not occur even if the brake signal fails in the HWBB state. Also, if a Servomotor with a Brake is used, keep in mind that the brake in the Servomotor is used only to prevent the moving part from being moved by gravity or an external force and it cannot be used to stop the Servomotor.

5.2.11 Stopping Methods

If the /HWBB1 or /HWBB2 signal turns OFF and the HWBB function operates, the Servomotor will stop according to the stop mode that is set for stopping the Servomotor when the servo turns OFF (Pn001 = n.□□□X). However, if the dynamic brake is enabled (Pn001 = n.□□□0 or n.□□□1), observe the following precautions.

⚠ CAUTION

- The dynamic brake is not a safety-related element. You must design the system so that a hazardous condition does not occur even if the Servomotor coasts to a stop in the HWBB state. Normally, we recommend that you use a sequence that returns to the HWBB state after stopping for a reference.
- If the application frequently uses the HWBB function, stopping with the dynamic brake may result in the deterioration of elements in the SERVOPACK. To prevent internal elements from deteriorating, use a sequence in which the HWBB state is returned to after the Servomotor has come to a stop.

5.2.12 ALM (Servo Alarm) Signal

The ALM (Servo Alarm) signal is not output in the HWBB state.

5.3 EDM1 (External Device Monitor)

The EDM1 (External Device Monitor) signal is used to monitor failures in the HWBB function. Connect the monitor signal as a feedback signal, e.g., to the Safety Unit.

Note: To meet performance level e (PLe) in EN ISO 13849-1 and SIL3 in IEC 61508, the EDM1 signal must be monitored by the host controller. If the EDM1 signal is not monitored by the host controller, the level will be safety performance level c (PLc) and SIL1.

- Failure Detection Signal for EDM1 Signal

The relationship between the EDM1, /HWBB1, and /HWBB2 signals is shown below.

Detection of failures in the EDM1 signal circuit can be achieved by using the four status of the EDM1 signal in the following table. A failure can be detected by checking the failure status, e.g., when the power supply is turned ON.

Signal	Logic			
/HWBB1	ON	ON	OFF	OFF
/HWBB2	ON	OFF	ON	OFF
EDM1	OFF	OFF	OFF	ON

⚠ WARNING

- The EDM1 signal is not a safety output. Use it only for monitoring for failures.

5.3.1 EDM1 Output Signal Specifications

If an HWBB function is requested by turning OFF the two HWBB input signal channels (/HWBB1 and /HWBB2) when the safety function is operating normally, the EDM1 output signal will be turned ON within 8 ms.

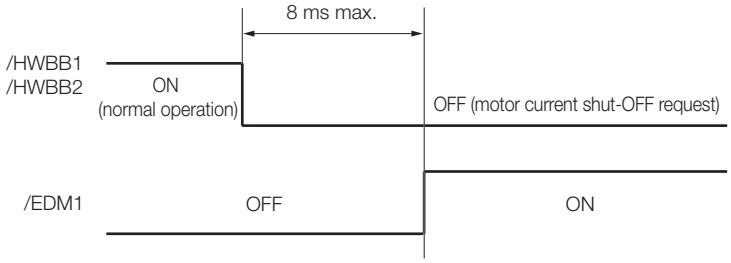

5.4 HWBB Function Application Example

This section provides examples of using the HWBB function.

5.4.1 Connection Example

In the following example, a Safety Unit is used as the host controller and the HWBB function operates when the guard is opened.

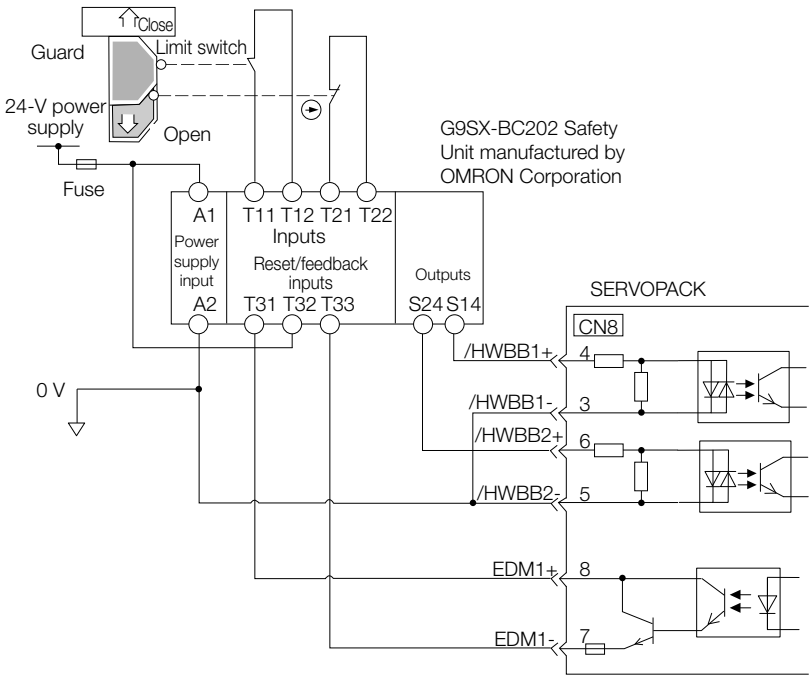

When the guard is opened, both the /HWBB1 and the /HWBB2 signals turn OFF, and the EDM1 signal turns ON. Because the feedback circuit is ON while the guard is closed, the Safety Unit is reset, the /HWBB1 and the / HWBB2 signals turn ON, and the operation is enabled.

Note: The EDM1 signal is used as a source output. Connect the EDM1 so that the current flows from EMD1+ to EMD1-.

5.4.2 Failure Detection Method

If a failure occurs (e.g., the /HWBB1 or the /HWBB2 signal remains ON), the Safety Unit is not reset when the guard is closed because the EDM1 signal remains OFF. Therefore starting is not possible and a failure is detected.
In this case the following must be considered: an error in the external device, disconnection of the external wiring, short-circuiting in the external wiring, or a failure in the SERVOPACK. Find the cause and correct the problem.

5.4.3 Procedure

1	Request is received to open the guard.
2	If the motor is operating, a stop command is received from the host controller, the motor stops, and the servo is turned OFF.
3	The guard is opened.
4	The /HWBB1 and /HWBB2 signals turn OFF and the HWBB function operates. (Working inside the guard is enabled.)
5	The worker leaves the guarded area after completing work.
6	The guard is closed.
7	The servo is turned ON by the host controller.

5.5 Validating the HWBB Function

When you commission the system or perform maintenance or SERVOPACK replacement, you must always perform the following validation test on the HWBB function after completing the wiring. (It is recommended that you keep the confirmation results as a record.)

- When the /HWBB1 and /HWBB2 signals turn OFF, confirm that the Digital Operator displays **Hbb** and that the Servomotors do not operate for axis A and axis B.
- Monitor the ON/OFF status of the /HWBB1 and /HWBB2 signals.
  If the ON/OFF status of the signals do not coincide with the display, the following must be considered: an error in the external device, disconnection of the external wiring, short-circuiting in the external wiring, or a failure in the SERVOPACK. Find the cause and correct the problem.
  Refer to the following manual for your SERVOPACK for details on the monitor.
  - Σ-7-Series Σ-7W SERVOPACK with MECHATROLINK-III Communications References Product Manual (Manual No.: SIEP S800001 29)
  - Σ-7-Series Σ-7C SERVOPACK Product Manual (Manual No.: SIEP S800002 04)
- Confirm that the EDM1 signal is OFF while in normal operation by using the feedback circuit input display of the connected device.

5.6 Connecting the Safety Function Device

This section describes how to connect the SERVOPACK to a safety function device.

1. Use a pair of pliers or a similar tool to remove the Safety Jumper Connector from the connector for the safety function device (CN8).

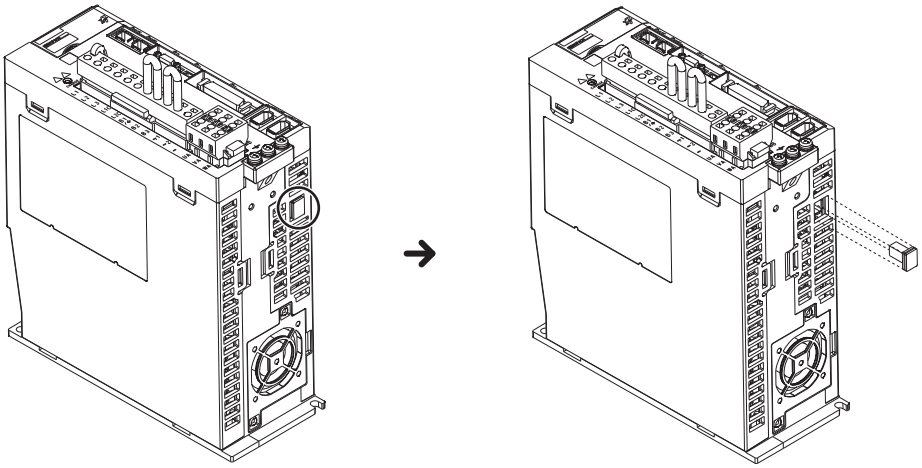

2. Connect the safety function device to the connector for the safety function device (CN8).

Note: If you do not connect a safety function device, leave the Safety Jumper Connector connected to the connector for the safety function device (CN8). If the SERVOPACK is used without the Safety Jumper Connector connected to CN8, no current will be supplied to the Servomotor and no motor torque will be output. In this case, **Hbb** will be displayed on the Digital Operator or SigmaWin+.

Maintenance

6

This chapter provides information on the meaning of, causes of, and corrections for alarms that are related to the HWBB function.

6.1 Alarm Displays 6-2

6.1.1 Alarms Related to the HWBB Function 6-2

6.1.2 Troubleshooting Alarms Related to the HWBB Function 6-3

6.2 Troubleshooting Based on the Operation and Conditions of the Servomotor . . 6-4

6.1 Alarm Displays

If an error occurs in the SERVOPACK, an alarm number will be displayed on the panel display or SigmaWin+. However, if no alarm number appears on the panel display, this indicates a SERVOPACK system error. Replace the SERVOPACK.

When an alarm is displayed on the panel display, the display will change in the following order.

Example: Alarm A.E60

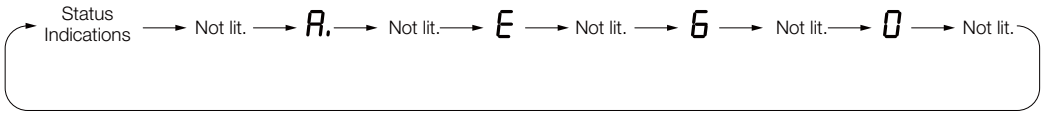

This section provides a list of the alarms that are related to the HWBB function and the causes of and corrections for those alarms. Refer to the following manual for your SERVOPACK for information on other alarms and the causes of and corrections for them.

- Σ-7-Series Σ-7W SERVOPACK with MECHATROLINK-III Communications References Product Manual (Manual No.: SIEP S800001 29)
- Σ-7-Series Σ-7C SERVOPACK Troubleshooting Manual (Manual No.: SIEP S800002 07)

6.1.1 Alarms Related to the HWBB Function

The following alarm table gives the alarm name, alarm meaning, Servomotor stopping method for alarms, and alarm reset possibility in order of the alarm codes for the alarms that are related to the HWBB function.

Servomotor Stopping Method for Alarms

Refer to the following manual for your SERVOPACK for information on the stopping method for alarms.

- Σ-7-Series Σ-7W SERVOPACK with MECHATROLINK-III Communications References Product Manual (Manual No.: SIEP S800001 29)
- Σ-7-Series Σ-7C SERVOPACK Product Manual (Manual No.: SIEP S800002 04)

Alarm Reset Possibility

Yes: You can use an alarm reset to clear the alarm. However, this assumes that the cause of the alarm has been removed.
No: You cannot clear the alarm.

Alarms for Both Axes

If “All Axes” is given below the alarm number, the alarm applies to both axes. If an alarm occurs for one axis, the same alarm status will occur for the other axis.

List of Alarms

Alarm Number	Alarm Name	Alarm Meaning	Servo-motor Stop-ping Method	Alarm Reset Possi-ble?
A.Eb1 All Axes	Safety Function Signal Input Timing Error	An error occurred in the input timing of the safety function signal.	Gr.1	No
A.EC8 All Axes	Gate Drive Error 1	An error occurred in the gate drive circuit.	Gr.1	No
A.EC9 All Axes	Gate Drive Error 2	An error occurred in the gate drive circuit.	Gr.1	No

6.1.2 Troubleshooting Alarms Related to the HWBB Function

The following table describes troubleshooting alarms that are related to the HWBB function. Contact your Yaskawa representative if you cannot solve a problem with the corrections given in the table.

Alarm Number: Alarm Name	Possible Cause	Confirmation	Correction	Reference
A.Eb1: Safety Function Signal Input Timing Error	The delay between activation of the /HWBB1 and /HWBB2 input signals for the HWBB function was ten second or longer.	Measure the time delay between the /HWBB1 and /HWBB2 signals.	The output signal circuits or devices for /HWBB1 and /HWBB2 or the SERVOPACK input signal circuits may be faulty. Alternatively, the input signal cables may be disconnected. Check to see if any of these items are faulty or have been disconnected.	page 5-1
	A failure occurred in the SERVOPACK.	–	Replace the SERVOPACK.	–
A.EC8: Gate Drive Error 1 (An error occurred in the gate drive circuit.)	A failure occurred in the SERVOPACK.	–	Turn the power supply to the SERVOPACK OFF and ON again. If an alarm still occurs, the SERVOPACK may be faulty. Replace the SERVOPACK.	–
A.EC9: Gate Drive Error 2 (An error occurred in the gate drive circuit.)				

6.2 Troubleshooting Based on the Operation and Conditions of the Servomotor

This section provides troubleshooting information related to the HWBB function based on the operation and conditions of the Servomotor, including causes and corrections.

Refer to the following manual for your SERVOPACK for information on the causes of and corrections for other problems.

- Σ-7-Series Σ-7W SERVOPACK with MECHATROLINK-III Communications References Product Manual (Manual No.: SIEP S800001 29)
- Σ-7-Series Σ-7C SERVOPACK Troubleshooting Manual (Manual No.: SIEP S800002 07)

Problem	Possible Cause	Confirmation	Correction	Reference
Servomotor Does Not Start	The safety input signals (/HWBB1 or /HWBB2) were not turned ON.	Check the /HWBB1 and /HWBB2 input signals.	Turn ON the /HWBB1 and /HWBB2 input signals. If you are not using the safety function, connect the Safety Jumper Connector (provided as an accessory) to CN8.	–

Appendices

7

This appendices provide information on interpreting panel displays that are unique to the HWBB function, and tables of corresponding SERVOPACK and SigmaWin+ function names.

7.1 Interpreting Panel Displays 7-2

7.1.1 Panel Display during the HWBB State 7-2

7.2 Corresponding SERVOPACK and SigmaWin+ Function Names . . 7-3

7.2.1 Corresponding SERVOPACK Monitor Display Function Names 7-3

7.1 Interpreting Panel Displays

You can check the Servo Drive status on the panel display of the SERVOPACK.

Also, if an alarm or warning occurs, the alarm or warning number will be displayed.

This section describes the panel displays during the HWBB state. Refer to the following manual for other panel displays.

Σ-7-Series Σ-7W SERVOPACK with MECHATROLINK-III Communications References Product Manual (Manual No.: SIEP S800001 29)

Information The Σ-7C SERVOPACKs do not have a panel display. You can check the status of the Servo Drive from the SigmaWin+.

7.1.1 Panel Display during the HWBB State

You can check the Servo Drive status on the panel display of the SERVOPACK.

During the HWBB state, the display will be changed in the following order.

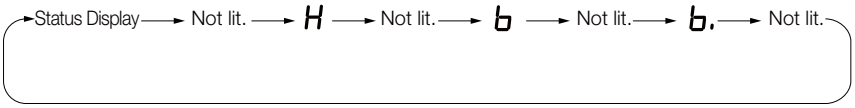

7.2 Corresponding SERVOPACK and SigmaWin+ Function Names

The following table gives the corresponding monitor display names between the SERVOPACK and SigmaWin+ that are related to the HWBB function.

Refer to the following manual for the the compatibility with other monitor display names.

Σ-7-Series Σ-7W SERVOPACK with MECHATROLINK-III Communications References Product Manual (Manual No.: SIEP S800001 29)

7.2.1 Corresponding SERVOPACK Monitor Display Function Names

If “All Axes” is given below the Un number, the monitor display applies to both axes. The total value for all axes or the contents for all axes are displayed on the monitor.

SigmaWin+		SERVOPACK	
Menu Bar Button	Name [Unit]	Un No.	Name [Unit]
Status Monitor	Safety I/O Signal Monitor	Un015 All Axes	Safety I/O Signal Monitor

Index

Symbols

/HWBB1 - 4-9
/HWBB2 - 4-9

A

Alarm - 6-2
alarm reset possibility - 6-2

B

base block (BB) - xiii
block diagram - 2-7

C

CN8 - 4-8
coefficient of speed fluctuation - - - - - - - - - - - - 2-4, 2-6
connecting a safety function device - - - - - - - - - - - 5-16

D

diagnostic output circuits - - - - - - - - - - - - - - - - - - 4-9

E

EDM1 - 5-12
EDM1 (External Device Monitor) signal - - - - - - - - - - 5-12

H

HWBB - xiii
detecting errors in HWBB signal - - - - - - - - - - - - 5-9
HWBB input signal specifications- - - - - - - - - - - - 5-9
HWBB function - 5-3
application examples- - - - - - - - - - - - - - - - - - 5-13
HWBB input signal waveform trace - - - - - - - - - - 5-9
precautions - 5-2
verification test - 5-15
HWBB function signal - 4-8
HWBB input circuits - 4-8
HWBB state - 5-4
resetting - 5-7

L

Linear Servomotor - xiii, xiv

M

Main Circuit Cable - xiii
MPE720 - xiii

R

risk assessment - 5-4
Rotary Servomotor - xiii

S

Servo Drive - xiii
servo lock - xiii
servo OFF - xiii
servo ON - xiii
Servo System - xiii
Servomotor - xiii
SERVOPACK - xiii
part names - 1-4
SigmaWin+ - xiii
storage humidity - 2-2, 2-5
storage temperature - - - - - - - - - - - - - - - - - - 2-2, 2-5
surrounding air humidity - - - - - - - - - - - - - - - - 2-2, 2-5
surrounding air temperature - - - - - - - - - - - - - - 2-2, 2-5

T

troubleshooting alarms - 6-3

Revision History

The revision dates and numbers of the revised manuals are given on the bottom of the back cover.

MANUAL NO. SIEP S800001 72B <1>-0
Web revision number
Revision number

Published in Japan July 2016
Date of publication

Date of Publication	Rev. No.	Web Rev. No.	Section	Revised Contents
August 2020	<3>	1	Preface, 1.2, 2.1.1, 2.1.2, 2.3.2, 6.1	Partly revised.
February 2019		0	Preface, 2.4.1, 2.4.2	Partly revised.
			Back cover	Revision: Address
November 2017	<2>	0	All chapters	Partly revised.
			Preface	Revision: Information on certification for standards
			Back cover	Revision: Address
July 2016	<1>	0	Front cover	Revision: Format
			Preface	Revision: EN ISO13849-1: 2008/AC: 2009 changed to EN ISO13849-1: 2015
			All chapters	Addition: Σ-7C
			Back cover	Revision: Address and format
March 2015	–	–	–	First edition

Σ-7-Series AC Servo Drive

Σ-7W/Σ-7C SERVOPACK with Hardware Option Specifications HWBB Function

Product Manual

IRUMA BUSINESS CENTER (SOLUTION CENTER)
480, Kamifujisawa, Iruma, Saitama, 358-8555, Japan
Phone: +81-4-2962-5151 Fax: +81-4-2962-6138
www.yaskawa.co.jp

YASKAWA AMERICA, INC.
2121, Norman Drive South, Waukegan, IL 60085, U.S.A.
Phone: +1-800-YASKAWA (927-5292) or +1-847-887-7000 Fax: +1-847-887-7310
www.yaskawa.com

YASKAWA ELÉTRICO DO BRASIL LTDA.
777, Avenida Piraporinha, Diadema, São Paulo, 09950-000, Brasil
Phone: +55-11-3585-1100 Fax: +55-11-3585-1187
www.yaskawa.com.br

YASKAWA EUROPE GmbH
Hauptstraβe 185, 65760 Eschborn, Germany
Phone: +49-6196-569-300 Fax: +49-6196-569-398
www.yaskawa.eu.com E-mail: info@yaskawa.eu.com

YASKAWA ELECTRIC KOREA CORPORATION
35F, Three IFC, 10 Gukjegeumyung-ro, Yeongdeungpo-gu, Seoul, 07326, Korea
Phone: +82-2-784-7844 Fax: +82-2-784-8495
www.yaskawa.co.kr

YASKAWA ASIA PACIFIC PTE. LTD.
30A, Kallang Place, #06-01, 339213, Singapore
Phone: +65-6282-3003 Fax: +65-6289-3003
www.yaskawa.com.sg

YASKAWA ELECTRIC (THAILAND) CO., LTD.
59, 1F-5F, Flourish Building, Soi Ratchadapisek 18, Ratchadapisek Road, Huaykwang, Bangkok, 10310, Thailand
Phone: +66-2-017-0099 Fax: +66-2-017-0799
www.yaskawa.co.th

YASKAWA ELECTRIC (CHINA) CO., LTD.
22F, Link Square 1, No.222, Hubin Road, Shanghai, 200021, China
Phone: +86-21-5385-2200 Fax: +86-21-5385-3299
www.yaskawa.com.cn

YASKAWA ELECTRIC (CHINA) CO., LTD. BEIJING OFFICE
Room 1011, Tower W3 Oriental Plaza, No.1, East Chang An Avenue,
Dong Cheng District, Beijing, 100738, China
Phone: +86-10-8518-4086 Fax: +86-10-8518-4082

YASKAWA ELECTRIC TAIWAN CORPORATION
12F, No. 207, Section 3, Beishin Road, Shindian District, New Taipei City 23143, Taiwan
Phone: +886-2-8913-1333 Fax: +886-2-8913-1513 or +886-2-8913-1519
www.yaskawa.com.tw

YASKAWA

YASKAWA ELECTRIC CORPORATION

In the event that the end user of this product is to be the military and said product is to be employed in any weapons systems or the manufacture thereof, the export will fall under the relevant regulations as stipulated in the Foreign Exchange and Foreign Trade Regulations. Therefore, be sure to follow all procedures and submit all relevant documentation according to any and all rules, regulations and laws that may apply.

Specifications are subject to change without notice for ongoing product modifications and improvements.

© 2015 YASKAWA ELECTRIC CORPORATION

MANUAL NO. SIEP S800001 72D <3>-1

Published in Japan August 2020
19-10-16
Original instructions